thermoscientific

# ISQ and TSQ GC-MS

## Mass Spectrometers

## Spare Parts Guide

1R120621-0004 Revision A March 2022

ThermoFisher SCIENTIFIC

© 2022 Thermo Fisher Scientific Inc. All rights reserved.

ISQ, TSQ, TRACE, and TriPlus are trademarks and Xcalibur is a registered trademark of Thermo Fisher Scientific in the United States.

The following are registered trademarks in the United States and other countries: Microsoft, Windows, Office, XP, and Excel are registered trademarks of Microsoft. Adobe, and Acrobat are registered trademarks of Adobe Systems Incorporated. SilTite is a registered trademark of SGE Analytical Science in the United States. Vespel is a registered trademark of E.I. du Pont de Nemours and Company TORX® is a registered trademark of Camcar LLC of Acument Global Technologies.

All other trademarks are the property of Thermo Fisher Scientific and its subsidiaries.

Thermo Fisher Scientific Inc. provides this document to its customers with a product purchase to use in the product operation. This document is copyright protected and any reproduction of the whole or any part of this document is strictly prohibited, except with the written authorization of Thermo Fisher Scientific Inc.

The contents of this document are subject to change without notice. All technical information in this document is for reference purposes only. System configurations and specifications in this document supersede all previous information received by the purchaser.

**Thermo Fisher Scientific Inc. makes no representations that this document is complete, accurate or error-free and assumes no responsibility and will not be liable for any errors, omissions, damage or loss that might result from any use of this document, even if the information in the document is followed properly.**

This document is not part of any sales contract between Thermo Fisher Scientific Inc. and a purchaser. This document shall in no way govern or modify any Terms and Conditions of Sale, which Terms and Conditions of Sale shall govern all conflicting information between the two documents.

Release history: Revision A, March 2022.

**General Lab Equipment, Not for Clinical, Patient or Diagnostic Use.**

C

# Contents


**Preface** . . . . . **xi**
About Your System . . . . . xi
Related Documentation . . . . . xii
System Requirements . . . . . xii
Safety and Special Notices . . . . . xiii
Special Notices . . . . . xiii
Safety Symbols and Signal Words . . . . . xiii
Hydrogen Safety Precautions . . . . . xv
Using Hydrogen with the ISQ Series Mass Spectrometer . . . . . xvi
Using Hydrogen with TSQ Series Mass Spectrometer . . . . . xvii
Hydrogen Connection Guidelines . . . . . xviii
Purchasing Hydrogen . . . . . xix
Properly Storing Hydrogen . . . . . xx
Hydrogen Safety Codes, Standards and References . . . . . xxi
Hazardous Substances Precautions . . . . . xxii
Biological Hazard Warning Note . . . . . xxii
Venting Toxic Gases . . . . . xxiii
Contacting Us . . . . . xxiii

**Chapter 1** **Ordering Spare Parts** . . . . . **1**
Identifying A Part . . . . . 2
Calibration Gas Components . . . . . 20
Collision Gas Components . . . . . 29
Column Components . . . . . 31
Fan and Filter Components . . . . . 36
Ion Source Components . . . . . 41
Ion Source Cartridge Components . . . . . 49
Electron Multiplier Components . . . . . 53
Dual Filament Components . . . . . 58
Analyzer Components . . . . . 60
Board Components . . . . . 74
Power Supply Components . . . . . 87
Vacuum Interlock Components . . . . . 92
Manifold Components . . . . . 100
Cover Components . . . . . 109

Pump Components . . . . . 124
MS System Tools . . . . . 127
Upgrade Equipment . . . . . 136

thermoscientific

# Declaration

Manufacturer: Thermo Fisher Scientific

Thermo Fisher Scientific is the manufacturer of the instrument described in this manual and, as such, is responsible for the instrument safety, reliability and performance only if:

- installation,
- recalibration, and
- changes and repairs

have been carried out by authorized personnel and if:

- the local installation complies with local law regulations,
- the instrument is used according to the instructions provided, and
- if its operation is only entrusted to qualified trained personnel.

Thermo Fisher Scientific is not liable for any damages derived from the non-compliance with the aforementioned recommendations.

# Regulatory Compliance

Thermo Fisher Scientific performs complete testing and evaluation of its products to ensure full compliance with applicable domestic and international regulations. When the system is delivered to you, it meets all pertinent electromagnetic compatibility (EMC) and safety standards as described in the next section or sections by product name.

Changes that you make to your system may void compliance with one or more of these EMC and safety standards. Changes to your system include replacing a part or adding components, options, or peripherals not specifically authorized and qualified by Thermo Fisher Scientific. To ensure continued compliance with EMC and safety standards, replacement parts and additional components, options, and peripherals must be ordered from Thermo Fisher Scientific or one of its authorized representatives.

# EMC and Safety Standards

- ITQ and Ion Trap Series standards: EMC EN 61326-1:2006. Safety IEC 61010-1:2001, IEC 61010-2-081:2001
- Direct Probe Controller (DPC) standards: EMC EN 61326-1:2006. Safety IEC 61010-1:2001, IEC 61010-2-081:2001
- ISQ, ISQ 7000, ISQ 7610 standards: EMC EN 61326-1:2013. Safety IEC 61010-1:2010, IEC 61010-2-010:2014, IEC 61010-2-081:2015.
- TSQ 8000, TSQ 8000 Evo, TSQ Duo, TSQ 9000, and TSQ 9610 standards: EMC EN 61326-1:2013. Safety IEC 61010-1:2010, IEC 61010-2-010:2014, IEC 61010-2-081:2015.

thermoscientific

# FCC Compliance Statement

THIS DEVICE COMPLIES WITH PART 15 OF THE FCC RULES. OPERATION IS SUBJECT TO THE FOLLOWING TWO CONDITIONS: (1) THIS DEVICE MAY NOT CAUSE HARMFUL INTERFERENCE, AND (2) THIS DEVICE MUST ACCEPT ANY INTERFERENCE RECEIVED, INCLUDING INTERFERENCE THAT MAY CAUSE UNDESIRED OPERATION.

**CAUTION** Read and understand the various precautionary notes, signs, and symbols contained inside this manual pertaining to the safe use and operation of this product before using the device.

# Notice on Lifting and Handling of Thermo Scientific Instruments

For your safety, and in compliance with international regulations, the physical handling of this Thermo Fisher Scientific instrument ***requires a team effort*** to lift and/or move the instrument. This instrument is too heavy and/or bulky for one person alone to handle safely.

# Notice on the Proper Use of Thermo Scientific Instruments

In compliance with international regulations: Use of this instrument in a manner not specified by Thermo Fisher Scientific could impair any protection provided by the instrument.

# Notice on the Susceptibility to Electromagnetic Transmissions

Your instrument is designed to work in a controlled electromagnetic environment. Do not use radio frequency transmitters, such as mobile phones, in close proximity to the instrument.

# EU REACH Statement

he European Commission promulgated legislation that covers the registration, evaluation, authorization and restriction of chemicals within the European Union community under (EC) No 1907/2006. This regulation is commonly known as REACH. Thermo Fisher Scientific is committed to meeting all compliance obligations under REACH. As per Article 33 of the Regulation, this product may include items which contain more than 0.1% by weight of some SVHC Candidate Substance. Some electronic parts and copper alloys can contain lead.

thermoscientific

For manufacturing location, see the label on the instrument.

# WEEE Directive

# 2012/19/EU

This product is required to comply with the European Union's Waste Electrical & Electronic Equipment (WEEE) Directive 2012/19/EU. It is marked with the following symbol:

Thermo Fisher Scientific is registered with B2B Compliance (B2Bcompliance.org.uk) in the UK and with the European Recycling Platform (ERP-recycling.org) in all other countries of the European Union and in Norway.

If this product is located in Europe and you want to participate in the Thermo Fisher Scientific Business-to-Business (B2B) Recycling Program, send an email request to weee.recycle@thermofisher.com with the following information:

- WEEE product class
- Name of the manufacturer or distributor (where you purchased the product)
- Number of product pieces, and the estimated total weight and volume
- Pick-up address and contact person (include contact information)
- Appropriate pick-up time
- Declaration of decontamination, stating that all hazardous fluids or material have been removed from the product

For additional information about the Restriction on Hazardous Substances (RoHS) Directive for the European Union, search for RoHS on the Thermo Fisher Scientific European language websites.

IMPORTANT This recycling program is not for biological hazard products or for products that have been medically contaminated. You must treat these types of products as biohazard waste and dispose of them in accordance with your local regulations.

thermoscientific

# Declarations of Conformity

-Original-

## UK Declaration of Conformity

UK CA

ThermoFisher SCIENTIFIC

Thermo Fisher Scientific
2215 Grand Avenue Parkway
Austin, Texas 78728
USA

**Declares, under sole responsibility, that products**

| | |
|---|---|
| **Designation:** | **Mass Spectrometer** |
| **Model:** | **Thermo Scientific TSQ Series**<br>*TSQ9K Series, TSQ 9610 Series* |

**as originally delivered complies with the essential requirements of the following applicable UK Regulations:**

| | |
|---|---|
| **Electrical Equipment (Safety) Regulations** | **2016** |
| **Electromagnetic Compatibility Regulations** | **2016** |
| **The Restriction of the Use of Certain Hazardous Substances in Electrical and Electronic Equipment (ROHS) Regulations** | **2012** |

**and complies with the following harmonized standards and other technical specifications:**

| | |
|---|---|
| **BS EN 61010-1:2010+A1:2019** | **BS EN 61326-1:2021** |

**Signed for and on behalf of: Thermo Fisher Scientific:**

Brody Guckenberger
(Director, Applied Research)
Thermo Fisher Scientific

| | |
|---|---|
| **Signature** | Austin, March 4, 2022<br>**Date** |

thermoscientific

-Original-

# EU Declaration of Conformity
*EU-Konformitätserklärung*

CE

ThermoFisher SCIENTIFIC

Thermo Fisher Scientific
2215 Grand Avenue Parkway
Austin, Texas 78728
USA

**We hereby declare that the following products**

| | |
|---|---|
| **Designation:** | **Mass Spectrometer** |
| **Model:** | **Thermo Scientific TSQ Series**<br>*TSQ9K Series, TSQ 9610 Series* |

**fulfill all the relevant requirements of the following directives:**

| | |
|---|---|
| **Low Voltage Directive** | **2014/35/EU** |
| **Electromagnetic Compatibility Directive** | **2014/30/EU** |
| **RoHS Directive** | **2011/65/EU and (EU) 2015/863** |

**The following relevant harmonized standards were used:**

| | |
|---|---|
| **EN 61010-1:2020-03** | **EN 61326-1:2013-07** |

**Person authorized to compile the technical file:**

Brody Guckenberger
(Director, Applied Research)
Thermo Fisher Scientific

| | |
|---|---|
| **Signature** | Austin, March 4, 2022<br>**Date** |

P

# Preface

This guide contains information about ordering spare parts for the Thermo Scientific™ ISQ™ and TSQ™ GC-MS mass spectrometers.

**Contents**


- About Your System
- Related Documentation
- System Requirements
- Safety and Special Notices
- Hydrogen Safety Precautions
- Hazardous Substances Precautions
- Contacting Us


## About Your System

Gas chromatography/mass spectrometry (GC/MS) represents a combination of two powerful analytical techniques: GC, which acts as a separation technique, and MS, which acts as a detection technique. Complex mixtures of individual compounds can be injected into the GC, either manually or by an autosampler and then separated for presentation to the MS. The MS will generate a mass spectrum of the GC eluate and its components. The mass spectrum can then be used for qualitative identification as well as accurate and precise quantification of the individual compounds present in the sample.

**WARNING** Thermo Fisher Scientific systems operate safely and reliably under carefully controlled environmental conditions. If the equipment is used in manner not specified by the manufacturer, the protections provided by the equipment may be impaired. If you maintain a system outside the specifications listed in this guide, failures of many types, including personal injury or death, may occur. The repair of instrument failures caused by operation in a manner not specified by the manufacturer is specifically excluded from the Standard Warranty and service contract coverage.

# Related Documentation

Thermo Fisher Scientific provides the following documents for the ISQ 7000 mass spectrometer:

- *ISQ 7610 Preinstallation Requirements Guide*, PN 1R120621-0001
- *ISQ 7610 Hardware Manual*, PN 1R120621-0002
- *ISQ 7610 User Guide*, PN 1R120621-0003
- *ISQ and TSQ GC-MS Spare Parts Guide*, PN 1R120621-0004
- *Direct Probe System User Guide* PN 1R120505-0006

Thermo Fisher Scientific provides the following documents for the TSQ 9000 mass spectrometer:

- *TSQ 9610 Preinstallation Guide*, PN 1R120622-0001
- *TSQ 9610 User Guide*, PN 1R120622-0002
- *TSQ 9610 Hardware Manual*, PN 1R120622-0003
- *ISQ and TSQ GC-MS Spare Parts Guide*, PN 1R120621-0004
- *Direct Probe System User Guide*, PN 1R120505-0006

Instrument Help is available from within the *AutoTune* and *Method Editor* software for each instrument.

# System Requirements

The data system used with your ISQ 7610 or TSQ 9610 system must meet these minimum requirements:

| System | Requirements |
|---|---|
| Hardware | • 3.6 GHz dual-core processor enabled<br>• 16 GB RAM with system managed memory enabled<br>• DVD drive<br>• Resolution display 1280 × 1024 (SXGA)<br>• 20 GB available on drive C<br>• NTFS format |
| Software | • Microsoft™ Windows™ 10 Operating System (64-bit) English only or Windows 7 Professional Operating System (64-bit)<br>• Microsoft .NET Framework 4.0 or later<br>• Thermo Scientific™ Xcalibur™ and Foundation software[a]<br>• Thermo Scientific™ TraceFinder™ software[b]<br>• Thermo Scientific™ Dionex™ Chromeleon software[b] |

[a] Check release notes for compatibility with ISQ Series or TSQ Series instrument control software.

[b] Check release notes for compatibility with Thermo Foundation, Xcalibur, and SQ Series or TSQ Series instrument control software.

# Safety and Special Notices

Make sure you follow the precautionary statements presented in this guide. The safety and other special notices appear in boxes.

## Special Notices

Special notices include the following:

**IMPORTANT** Highlights information necessary to prevent damage to software, loss of data, or invalid test results; or might contain information that is critical for optimal performance of the system.

**Note** Highlights information of general interest.

**Tip** Highlights helpful information that can make a task easier.

## Safety Symbols and Signal Words

All safety symbols are followed by **WARNING** or **CAUTION**, which indicates the degree of risk for personal injury, instrument damage, or both. Cautions and warnings are following by a descriptor. A **WARNING** is intended to prevent improper actions that *could* cause personal injury. A **CAUTION** is intended to prevent improper actions that *might* cause personal injury or instrument damage. You can find the following safety symbols on your instrument or in this guide.

| Symbol | Descriptor |
|---|---|
| | **BIOHAZARD:** Indicates that a biohazard *will*, *could*, or *might* occur. |
| | **BURN HAZARD:** Alerts you to the presence of a hot surface that *could* or *might* cause burn injuries. |
| | **ELECTRICAL SHOCK HAZARD:** Indicates that an electrical shock *could* or *might* occur. |

| Symbol | Descriptor |
|---|---|
| | **FIRE HAZARD:** Indicates a risk of fire or flammability *could* or *might* occur. |
| | **FLAMMABLE GAS HAZARD:** Alerts you to gases that are compressed, liquefied or dissolved under pressure and can ignite on contact with an ignition source. This symbol indicates this risk *could* or *might* cause physical injury. |
| | **GLOVES REQUIRED:** Indicates that you must wear gloves when performing a task or physical injury *could* or *might* occur. |
| | **HAND AND CHEMICAL HAZARD:** Indicates that chemical damage or physical injury *could* or *might* occur. |
| | **INSTRUMENT DAMAGE:** Indicates that damage to the instrument or component *might* occur. This damage might not be covered under the standard warranty. |
| | **LIFTING HAZARD:** Indicates that a physical injury *could* or *might* occur if two or more people do not lift an object. |
| | **MATERIAL AND EYE HAZARD:** Indicates that eye damage *could* or *might* occur. |
| | **RADIOACTIVE HAZARD:** Indicates that exposure to radioactive material *could* or *might* occur. |
| | **READ MANUAL:** Alerts you to carefully read your instrument's documentation to ensure your safety and the instrument's operational ability. Failing to carefully read the documentation *could* or *might* put you at risk for a physical injury. |

| Symbol | Descriptor |
|---|---|
| | **TOXIC SUBSTANCES HAZARD:** Indicates that exposure to a toxic substance could occur and that exposure *could* or *might* cause personal injury or death. |
| | For the prevention of personal injury, this general warning symbol precedes the **WARNING** safety alert word and meets the ISO 3864-2 standard. In the vocabulary of ANSI Z535 signs, this symbol indicates a possible personal injury hazard exists if the instrument is improperly used or if unsafe actions occur. This symbol and another appropriate safety symbol alerts you to an imminent or potential hazard that *could cause personal injury*. |

# Hydrogen Safety Precautions

Hydrogen is a colorless, odorless, highly flammable gas with the molecular formula $H_2$. Hydrogen gas presents a hazard as it is combustible over a wide range of concentrations: at ambient temperature and pressure, this ranges from about 4% to 74.2% by volume.

Hydrogen has a flash point of - 423 °F (- 253 °C) and an auto-ignition temperature of 1,040 °F (560 °C). It has a very low ignition energy and the highest burning velocity of any gas. If hydrogen is allowed to expand rapidly from high pressure, it can self-ignite. Hydrogen burns with a flame that can be invisible in bright light.

**WARNING FIRE HAZARD:** The use of hydrogen as a carrier gas is dangerous. Hydrogen is potentially explosive and must be used with extreme care. Any use of hydrogen gas must be reviewed by appropriate health and safety staff and all installations of hydrogen systems must be performed to applicable codes and standards. Thermo Fisher Scientific assumes no liability for the improper use of hydrogen as a carrier gas.

Before you begin using hydrogen, you should conduct a risk assessment based on the quantity of hydrogen to be used and the conditions of your laboratory. You should ask yourself:

"What hydrogen hazards associated with this project are most likely to occur?"

"What hydrogen hazards associated with this project have the potential to result in the worst consequences?"

- Try to reduce or eliminate the higher risks by using the proper ventilation to remove hydrogen gas before an ignitable concentration can accumulate. You should also consider purging the hydrogen to further reduce hazards and ensure anyone who will be working with hydrogen has basic hydrogen safety training.
- As with laboratory safety in general, be sure to wear safety glasses, laboratory coats, gloves, etc. Typically there are no specific requirements for gaseous hydrogen, other than eye protection when working with a compressed gas. If working with liquid (cryogenic) hydrogen, insulated gloves and protective shoes should be worn in addition to eye protection.

- You should post “No Smoking” and “No Open Flames” signs to identify hydrogen sources and cylinders. Maintain, inspect and leak-test all hydrogen sources regularly.
- All hydrogen shutoff valves should be clearly marked and permanent hydrogen piping should be labeled as such at the supply or discharge point and at regular intervals along its length. Where hydrogen gas piping passes through a wall, the piping should be labeled on both sides of the wall.
- There should also be contingency plans in place should an incident occur.
- The site emergency response team, as well as the local fire department, should know the location of all hydrogen storage tanks.

## Using Hydrogen with the ISQ Series Mass Spectrometer

To use hydrogen with the ISQ Series instrument, you must always shut off the GC carrier gas before venting or turning off the ISQ Series instrument. There are three hydrogen safety screws on the ISQ Series instrument that **must** be in place. These are attached to your instrument at the factory.

**Figure 1.** Hydrogen Safety Screws on the ISQ Series Instrument

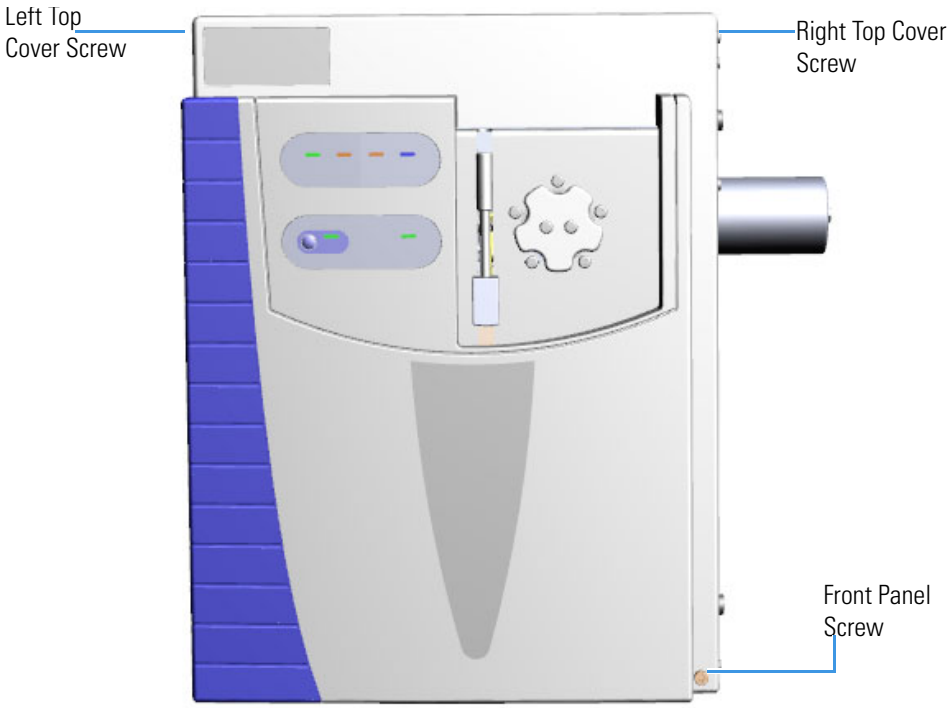


Before powering on the ISQ Series system, ensure that:

- All the covers and panels of the ISQ Series system are firmly attached.
- The vent valve is tightly closed if you vented the system.
- All fittings, ferrules, and o-rings are sealed.

## Using Hydrogen with TSQ Series Mass Spectrometer

To use hydrogen with the TSQ Series instrument, you must always shut off the GC carrier gas before venting or turning off the TSQ Series instrument. There are three hydrogen safety screws on the TSQ Series instrument that **must** be in place. These are attached to your instrument at the factory.

**Figure 2.** Hydrogen Safety Screws on the TSQ Series Instrument

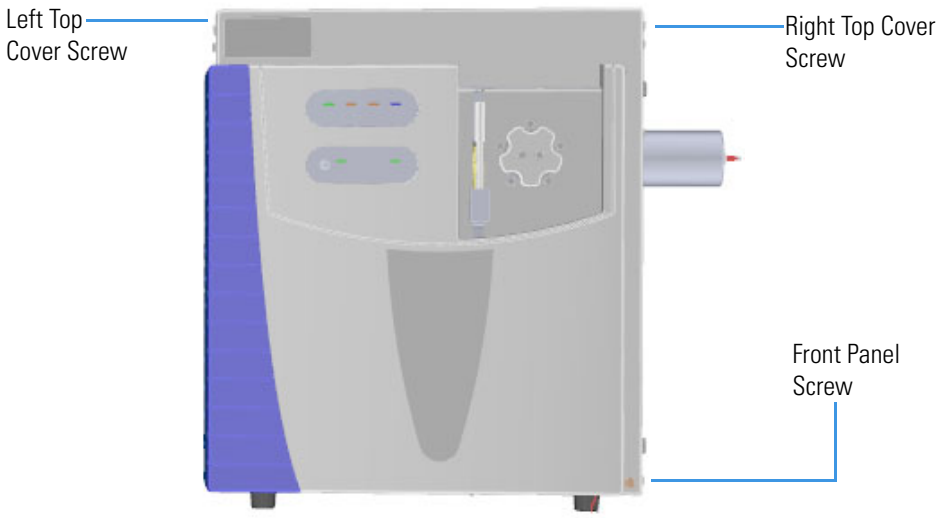


Before powering on the TSQ Series system, ensure that:

- All the covers and panels of the TSQ Series system are firmly attached.
- The vent valve is tightly closed if you vented the system.
- All fittings, ferrules, and o-rings are sealed.

## Hydrogen Connection Guidelines

Use the following guidelines to safely connect hydrogen to your system:

- **Piping**—Hydrogen must be delivered to equipment using appropriate piping and be done in such a way as to pose essentially no hazard to end-users. Piping systems for the delivery of hydrogen should be designed and installed by a person qualified by specific training and experience with hydrogen piping systems.

  Stainless steel is usually recommended because it is a safe, cost-effective material. Piping of *black iron* or copper must not be used, as the pipe can become brittle with age. Elastomeric/plastic tubing of various plastics and polymers should not be used, unless the tubing is approved for use with hydrogen. If elastomeric/plastic tubing is used for hydrogen gas delivery, the tubing should be tested for hydrogen permeability to minimize leakage.

  The hydrogen piping system must be flexible enough to endure routine thermal expansion and contraction. The system should also include considerations for the most severe condition of temperature and pressure expected during service. Piping and supports must be able to withstand static loading introduced by such things as ice and snow; and dynamic loading from high wind and earthquake.

  Caution should be used if burying hydrogen piping. Proper controls should be used to protect against damage and corrosion, and also to prevent Hydrogen from entering a building if there is any leakage.

- **Fittings**—All fittings must be of the proper type approved or designed for use with hydrogen gas. Use as few fittings as possible to minimize the potential for leaks. After installation, ensure that leak testing is carried out prior to system use, and on a regular basis.

  There must be no PTFE tape or other things like *plumber's putty* used to enhance a seal, as this actually is a detriment to a good seal. Ideally the best installation would use stainless steel tubing with appropriate gas-tight fittings.

  Welding is usually preferred for joints in hydrogen piping systems since welding provides a better connection and reduces the potential for leaks compared to mechanical fittings. Soft solder joints are not permitted for hydrogen systems (due to the low melting point of soft solder and its potential for brittle failure at cryogenic temperatures). Brazed joints are permitted, but such joints should be protected against the possibility of external fire.

  Tubing connections should be clamped to barbed or press-fit type connections. Hose clamps or *jubilee clamps* must not be used.

- **Valves**—All valves must be suitable for hydrogen service and for the specific operating conditions. Valves, including regulators, must not be used for hydrogen, unless they are designed and identified for such a use. Ball valves are often chosen because of their superior leak tightness through the valve seat. Pneumatic operators are usually chosen for remotely operated valves so that potential ignition sources (electricity) are remote from the valve.

Manual shutoff valves should be provided near each point of use, within immediate reach. If a hydrogen cylinder or hydrogen generation system is located within immediate reach, a separate point-of-use shutoff valve is usually not necessary.

Line regulators that have their source away from the point of use should have a manual shutoff valve near the point of use.

An emergency gas shutoff device in an accessible location outside the use area should be provided in addition to the manual point-of-use valve in each educational and instructional laboratory space that has a piped gas supply system.

If necessary, the piping system should have uninterruptible pressure relief. The pressure relief system should be designed to provide a discharge rate sufficient to avoid further pressure increase and should vent to a safe location outside or to a ventilation system exhaust.

## Purchasing Hydrogen

Use the following guidelines when purchasing hydrogen:

- Hydrogen Generator—Because it minimizes the amount of hydrogen present and reduces the degree of hazard, a hydrogen generator (also called an electrolyzer) is the safest way to purchase hydrogen in the quantity used in GC/MS.

  However, to minimize the degree of hazard, the hydrogen generator must only be operated in a non-explosive environment because hydrogen buildup can be ignitable. This means that your ventilation system for the room or lab hood must maintain an air exchange rate that is at least two orders of magnitude greater than the maximum hydrogen production rate of the hydrogen generator. Be sure to follow the manufacturers' directions about proper use and maintenance of the regulator.

  To prevent the possibility of releasing hydrogen, the hydrogen generator should be set to shut down if:

  – There is a loss of flow to the ventilation system

  – A hydrogen detector alarms at 25% of the lower flammable limit of hydrogen in air.

  The oxygen exhausted by the electrolyzer should be vented to the outside as well.

- Hydrogen Cylinder—Hydrogen can be delivered in standard laboratory gas bottles or cylinders. These cylinders have a limited amount of hydrogen in them and are a safe way to transport and store hydrogen. However, compressed hydrogen gas cylinders, like all compressed gas cylinders, must be secured in an upright position, ideally with a non-combustible chain or cable. If the cylinder falls over, the valve can be knocked off and the pressurized cylinder can take off like a rocket, which leads to the release of hydrogen and possibly an explosion, severe injury, or death. Never crack a hydrogen cylinder valve to remove dust or dirt from fittings prior to attaching a regulator, as there is a risk of self-ignition.

## Properly Storing Hydrogen

Storing and handling compressed hydrogen gas and cryogenic liquid hydrogen present potential health and safety hazards. Using proper storage and handling techniques is essential to maintaining a safe work environment.

Use the following guidelines when storing hydrogen:

- Store spare hydrogen gas cylinders outside and away from doors, windows, building air intake vents, structures, and vehicle routes. This precaution applies when the hydrogen is or is not in use. Indoor storage of spare hydrogen cylinders has special requirements, which is beyond the scope of this document. Documentation for each vessel should include a description of the vessel, a list of available drawings or other documents, the most recent inspection results, and the responsible person's name.
- Prevent spare cylinders from toppling by wrapping them with chains. The chains should also be protected against corrosion and excessive heat.
- Separate spare hydrogen cylinders from oxidizing gases (such as oxygen) with a 5 ft (1.5 m) tall fire barrier with a half-hour fire rating or place the cylinders at least 20 ft (6 m) apart.
- When moving hydrogen cylinders:
  - Remove the regulator and replace the cylinder valve cap before moving.
  - Move cylinders on cylinder carts or with other appropriate transport devices.
  - Never roll or drop a cylinder and never lift a cylinder by its protective cap.
- Bulk hydrogen systems include either gaseous or liquid hydrogen in fixed installations; in some gas systems a semi-permanent trailer (tube trailer) can be used. Storage vessels for compressed hydrogen gas or liquid hydrogen should be designed, constructed, tested, and maintained in accordance with applicable codes and standards. Bulk hydrogen systems represent a level of complexity again which is beyond the scope of this document; however some general guidelines are provided.
- The bulk hydrogen storage system should not be located beneath electric power lines, close to other flammable gases/liquids, or close to public areas. It should be readily accessible to authorized personnel and delivery equipment, but protected from physical damage or tampering.
- As liquid hydrogen systems also have a cryogenic hazard, additional safety considerations for the use of cryogenic liquids may be necessary.

## Hydrogen Safety Codes, Standards and References

The following list of safety codes, standards and references is in no way an exhaustive list. In fact, there may be federal, state or local codes that apply to your specific location. Check with all appropriate agencies with jurisdiction before installing or using a hydrogen system.

- Air Products Safetygram #4 Gaseous Hydrogen
- ANSI/AIAA standard for hydrogen safety guidelines is AIAA G-095-2004, Guide to Safety of Hydrogen and Hydrogen Systems
- ASME B31.1, Power Piping Code
- ASME B31.3, Process Piping Code
- ASME B31.8, Gas Transmission and Distribution Systems
- BCGA Code Of Practice CP4 Industrial Gas Cylinder Manifolds and Gas Distribution Pipework
- BCGA Code Of Practice CP33 The Bulk Storage of Gaseous Hydrogen at Users' Premises
- CGA G-5, Hydrogen
- CGA G-5.4, Standard for Hydrogen Piping Systems at Consumer Locations
- CGA G-5.5, Hydrogen Vent Systems
- CGA G-5.6, Hydrogen Pipeline Systems
- CGA G-5.8, High Pressure Hydrogen Piping Systems at Consumer Locations.
- FM Global Property Loss Prevention Data Sheets 7-50: Compressed Gases in Cylinders
- FM Global Property Loss Prevention Data Sheets 7-91: Hydrogen
- IGC Doc 121/04/E, Hydrogen Transportation Pipelines System Design Features
- NASA
- NSS 1740.16 Safety Standard For Hydrogen And Hydrogen Systems Guidelines for Hydrogen System Design, Materials Selection, Operations, Storage, and Transportation
- NFPA 52, Vehicular Fuel Systems Code
- NFPA 55, Standard for the Storage, Use, and Handling of Compressed Gases and Cryogenic Fluids in Portable and Stationary Containers, Cylinders, and Tanks, 2005 Edition
- NFPA 68, Standard on Explosion Protection by Deflagration Venting
- NFPA 70, National Electrical Code

- NFPA 497, Recommended Practice for the Classification of Flammable Liquids, Gases, or Vapors and of Hazardous (Classified) Locations for Electrical Installations in Chemical Process Areas
- NFPA 13, Standard for the Installation of Sprinkler Systems
- NFPA 45, Standard on Fire Protection for Laboratories Using Chemicals
- NFPA 55, Standard for the Storage, Use, and Handling of Compressed Gases and Cryogenic Fluids in Portable and Stationary Containers, Cylinders, and Tanks
- NFPA 68, 2007 Standard on Explosion Protection by Deflagration Venting
- NFPA 69, Standard on Explosion Prevention Systems
- NFPA 91, Standard for Exhaust Systems for Air Conveying of Vapors
- NFPA 255, Standard Method of Test of Surface Burning Characteristics of Building Materials
- OSHA 29CFR1910.103 1910.103 Hydrogen

# Hazardous Substances Precautions

**WARNING** Before using hazardous substances (toxic, harmful, and so on), please read the hazard indications and information reported in the applicable Material Safety Data Sheet (MSDS). Use personal protective equipment according to the safety requirements.

## Biological Hazard Warning Note

In laboratories where samples with potential biological hazards are handled, the user must label any equipment or parts which might become contaminated with biohazardous material.

The appropriate warning labels are included with the shipment of the instrument. It is the user's responsibility to label the relevant parts of the equipment.

When working with biohazardous materials, you are responsible for fulfilling the following mandatory requirements:

- Providing instructions on how to safely handle biohazardous material.
- Training operators to be aware of potential hazards.

- Providing personal protective equipment.
- Providing instructions for what to do if operators are exposed to aerosols or vapors during normal operation (within the intended use of the equipment) or in case of single fault situations such as a broken vial. The protective measures must consider potential contact with the skin, mouth, nose (respiratory organs), and eyes.
- Providing instructions for decontamination and safe disposal of relevant parts.

**WARNING** The user or operator is responsible for the safe handling of hazardous chemicals or biological compounds including (but not limited to) bacterial or viral samples and the associated waste, according to international and local regulations.

## Venting Toxic Gases

When analyzing toxic compounds, be aware that during the normal operation of the GC some of the sample might be vented outside the instrument through the split and purge flow vents; therefore, be sure to vent the exhaust gases to a fume hood. Consult local environmental and safety regulations for instructions in exhausting fumes from your system.

# Contacting Us

There are several ways to contact Thermo Fisher Scientific for the information you need.

❖ **To find out more about our products**

Go to www.thermofisher.com for information about our products.

❖ **To get local contact information for sales or service**

Go to gcgcms.freshdesk.com/support/home

❖ **To suggest changes to documentation or to Help**

- Fill out a reader survey online at www.surveymonkey.com/s/PQM6P62.
- Send an e-mail message to the Technical Publications Editor at techpubs-austin@thermofisher.com.

# Ordering Spare Parts

This chapter contains illustrations and part numbers for all of the replaceable components in ISQ and TSQ GC-MS instruments. Refer to the hardware manual for your instrument for information about installing these components in your instrument. Any component throughout the documentation that has a part number can be ordered from us. Components without part numbers are not available.

**Contents**


- Identifying A Part
- Calibration Gas Components
- Collision Gas Components
- Column Components
- Fan and Filter Components
- Electron Multiplier Components
- Dual Filament Components
- Analyzer Components
- Board Components
- Power Supply Components
- Vacuum Interlock Components
- Manifold Components
- Cover Components
- Pump Components
- MS System Tools
- Upgrade Equipment

# Identifying A Part

To identify a part, you need to know where it is located in the instrument or the part's relationship to a particular functionality of the instrument. Use the categories in the table below to find a location or functionality that relates to the component you need. For example, if you know the part is related to the calibration gas, look in the Calibration Gas Components category. Then refer to the illustrations in that category to visually identify that particular part.

**IMPORTANT** Only components with a part number are available for purchase. The part you are looking for may be shown in an illustration, but if it does not list a part number, it is not available.

**Table 1.** Parts That Can Be Reordered

| Component | Thermo Scientific Part Number | Used on Instrument(s) | Category |
|---|---|---|---|
| Single Level Calibration Gas Module | 1R119246-0004 | All | Calibration Gas Components |
| Dual Level Calibration Gas Module | 1R119246-0003 | All | |
| Calibrant Reservoir Kit | 1R120433-0001 | All | |
| Graphite/Vespel Ferrule for Calibration Gas Modules | 1R76458-0030 | ISQ 7000 and ISQ 7610; TSQ 9000 and TSQ 9610 | |
| Transfer Line | 1R120402-0001 | ISQ, ISQ QD, ISQ LT, TSQ 8000, TSQ Duo, TSQ 8000 Evo | |
| O-ring for Transfer Line | 1R3814-223 | All | |
| Screws for Transfer Line | 1R76913-0410 | All | |
| Gas Mixing Chamber Kit | 1R120574-KIT | ISQ, ISQ QD, ISQ LT, TSQ 8000, TSQ Duo, TSQ 8000 Evo | |
| Gas Mixing Chamber (1) | 1R120574--0054 | ISQ, ISQ QD, ISQ LT, TSQ 8000, TSQ Duo, TSQ 8000 Evo | |
| Source Gas Tube (2 in Kit) | 1R120574-0055 (PN orders 1) | ISQ, ISQ QD, ISQ LT, TSQ 8000, TSQ Duo, TSQ 8000 Evo | |
| M3 × 8 mm Screw (2 in Kit) | 1R76913-0308 | ISQ, ISQ QD, ISQ LT, TSQ 8000, TSQ Duo, TSQ 8000 Evo | |
| Calibration Gas Line | 1R120438-0010 | All | |
| Vacuum Hose (Order 10 ft) | 1R76505-0625 | All | |
| FC-43 Calibration Compound | 1R50010-30059 | All | |
| 1 fg/µL OFN IDL Kit | 1R76310-0101K | ISQ 7000, ISQ 7610, TSQ 9000, TSQ 9610 | |
| 5 fg/µL OFN in Iso-octane | 1R76310-0105 | ISQ 7000, ISQ 7610, TSQ 9000, TSQ 9610 | |
| ISQ 7000, ISQ 7610, TSQ 9000 and TSQ 9610 Transfer Line Assembly | 1R120191-0020 | ISQ 7000, ISQ 7610, TSQ 9000, TSQ 9610 | |
| Calibration Gas Tube | 1R120191-3000 | ISQ 7000, ISQ 7610, TSQ 9000, TSQ 9610 | |

**Table 1.** Parts That Can Be Reordered, continued

| Component | Thermo Scientific Part Number | Used on Instrument(s) | Category |
|---|---|---|---|
| Collision Gas Module | 1R119246-0005 | TSQ All | Collision Gas Components |
| Tube Fitting, Collision Gas Module to Manifold | 1R76256-0045 | TSQ All | |
| Collision Gas Tube | 1R120557-0030 | TSQ All | |
| Tee, 1/8 in. | 1R76256-0126 | TSQ All | |
| Graphite Vespel™ Ferrule for 0.18 mm Columns (pkg of 10) | 1R76458-2016 | All | Column Components |
| Graphite Vespel Ferrule for 0.25 mm Column (pkg of 10) | 29033496 | All | |
| Graphite Vespel Ferrule for 0.32 mm Columns (pkg of 10) | 1R76458-2019 | All | |
| Graphite Vespel Ferrule for 0.53 mm Columns (pkg of 10) | 1R76458-2020 | All | |
| Graphite Vespel Ferrule for Calibration Gas Module Connection | 1R176458-0030 | All | |
| 2-hole Graphite Vespel Ferrule for <0.32mm Column (pkg of 10) | 1R76458-2018 | All | |
| No-Hole Graphite Vespel Ferrule (pkg of 10) | 1R76458-2009 | All | |
| Graphite Vespel Ferrule for 0.1–0.25 mm Columns to be used with Spring-loaded Transfer Line Nut (pkg of 10) | 290VA191 | All | |
| Spring-loaded Transfer Line Nut | 1R120434-0010 | All | |
| Nickel-Coated Nut for Graphite Vespel Ferrule (pkg of 5) | 1R76256-0060 | All | |
| SilTite Ferrule for 0.10-0.25mm ID Column (pkg of 10) | 1R76458-2000 | All | |
| SilTite Ferrule for 0.32mm Columns (pkg10) | 1R76458-2024 | All | |
| SilTite Ferrule for 0.53mm Columns (pkg10) | 1R76458-2026 | All | |
| Nut for SilTite Ferrules (pkg of 5) | 1R76458-2001 | All | |

**Table 1.** Parts That Can Be Reordered, continued

| Component | Thermo Scientific Part Number | Used on Instrument(s) | Category |
|---|---|---|---|
| Intake Filter/RF Shield (1) | 1R76475-5000 | All | Fan and Filter Components |
| Triple Filter with Base | A0950-01600 | All | |
| Triple Filter Replacement Cartridge | A0950-R1600 | All | |
| Oil Mist Filter | 1R76505-0036 | All | |
| Chassis Cooling Fan | 1R120443-0001 | All | |
| Nylon Rivet for Cooling Fan | 1R3326-5000 | All | |
| Air Deflector | 1R120552-0010 | TSQ All | |
| Front Wire Mesh Filter | 1R120554-0010 | TSQ All | |
| Left Rear Wire Mesh Filter | 1R120554-0020 | TSQ All | |
| Fan Plenum | 1R120553-0020 | TSQ All | |
| Fan Filter (Plastic) | 1R76475-5005 | TSQ All | |
| Turbo Cooling Fan | 1R120443-0003 | TSQ All | |

**Table 1.** Parts That Can Be Reordered, continued

| Component | Thermo Scientific Part Number | Used on Instrument(s) | Category |
|---|---|---|---|
| Ion Source Block | 1R120404-1311 | ISQ, ISQ LT, ISQ QD, TSQ 8000, TSQ Duo, TSQ 8000 Evo | Ion Source Components |
| ISQ 7000, ISQ 7610, TSQ 9000 Ion Source Block | 1R120191-2000 | ISQ 7000, ISQ 7610, TSQ 9000 | |
| TSQ 9610 Ion Source Block | 1R120189-2024 | TSQ 9610 with NVAEI | |
| NVAEI Lock Plate Assembly | 1R120189-6015 | TSQ 9610 with NVAEI | |
| NVAEI Lock Plate Washer | 1R120189-2060 | TSQ 9610 with NVAEI | |
| NVAEI Heat Block Alignment Pin | 1R120189-2022 | TSQ 9610 with NVAEI | |
| NVAEI Source Exchange Tool | 1R120189-0003 | TSQ 9610 with NVAEI | |
| NVAEI Source Sleeve | 1R120189-2000 | TSQ 9610 with NVAEI | |
| NVAEI Ion Volume | 1R120189-2001 | TSQ 9610 with NVAEI | |
| NVAEI Source Insulator Filament | 1R120189-2036 | TSQ 9610 with NVAEI | |
| NVAEI Ion Source | 1R120189-6030 | TSQ 9610 with NVAEI | |
| NVAEI Dual Filament | 1R120189-6000 | TSQ 9610 with NVAEI | |
| Repeller Plate | 1R120404-1312 | All | |
| Source-Repeller Thumbscrew | 1R120564-0004 | ISQ, ISQ LT, ISQ QD, TSQ 8000, TSQ Duo, TSQ 8000 Evo | |
| ISQ 7000, ISQ 7610, TSQ 9000, and TSQ 9610 Source-Repeller Thumbscrew | 1R120602-0206 | ISQ 7000, ISQ 7610, TSQ 9000, TSQ 9610 | |
| Thumbscrew-Repeller Spacer | 1RTSLI053A | All | |
| Lens/Source Heater | 1R120404-1330 | All | |
| Lens Heater Block | 1R120404-1321 | All | |
| Lock Washer for Lens Heater Block | 1R76902-0004 | All except TSQ 9610 with NVAEI | |
| Screw for Lens Heater Block | 1R76913-0306 | All | |
| Lens Heater Block Grounding Strap | 1R120404-2010 | All | |
| Screw for Grounding Strap | 1R76913-0305 | All | |
| Lens Plate and Springs | 1R120404-1750 | All | |
| Copper Washer for Lens Plate | 1R76483-5003 | All | |
| Screw for Lens Plate | 1R76913-0306 | All | |
| Source to Ion Guide Spacer | 1R120404-1340 | All | |

**Table 1.** Parts That Can Be Reordered, continued

| Component | Thermo Scientific Part Number | Used on Instrument(s) | Category |
|---|---|---|---|
| • Lens 1 | 1R120574-1039 | All | |
| • Lens 2 | 1R120404-1140 | All | |
| Electron Multiplier Plate | 1R120405-1000 | All | Electron Multiplier Components |
| Electron Multiplier | 1R76022-14633 | All except ISQ 7610 and TSQ 9610 | |
| Electron Multiplier, ISQ 7610 and TSQ 9610 | 1R76022-14634 | ISQ 7610 and TSQ 9610 | |
| Dynode Feedthrough | 1R120610-0040 | All | |
| Detector Assembly (Dynode, Electron Multiplier, and Lead Set) | 1R120379-0001 | All | |
| O-ring for Large Feedthrough | 1R3814-113 | All | |
| Screw for Large Feedthrough | 1R76913-0410 | All | |
| Anode Feedthrough Assembly Kit, includes: | 1R120480-0012 | All | |
| Anode Feedthrough Assembly | 1R120610-0050 | All | |
| O-ring for Anode Feedthrough | 1R3814-110 | All | |
| Standoff for Anode Feedthrough | 1R77005-3010 | All | |
| Screw for Anode Feedthrough (pkg of 4) | 1R76913-0306 | All | |
| Dual Filament | 1R120404-1940 | All | Dual Filament Components |
| Filament Retaining Spring Kit | 1R120404-1405 | All | |
| Screw for Filament Retaining Spring | 1R76913-0306 | All | |

**Table 1.** Parts That Can Be Reordered, continued

| Component | Thermo Scientific Part Number | Used on Instrument(s) | Category |
|---|---|---|---|
| ISQ EI Analyzer Tray Assembled | 1R120404-0003 | ISQ, ISQ LT, ISQ QD | Analyzer Components |
| ISQ 7000 and ISQ 7610 Analyzer Tray Assembled | 1R120191-0011T | ISQ 7000, ISQ 7610 | |
| TSQ Analyzer Tray Assembled | 1R120542-2535 | TSQ 8000, TSQ 8000 Evo, TSQ Duo | |
| TSQ 9000 Analyzer Tray Assembled | 1R120192-0011T | TSQ 9000 | |
| TSQ 9610 with NVAEI Analyzer Tray, Assembled | 1R120189-0011T | TSQ 9610 with NVAEI | |
| ISQ Analyzer Tray | 1R120404-2001 | ISQ All | |
| Ion Guide | 1R120404-3100 | All | |
| Ion Guide Clamp | 1R120404-3214 | All | |
| Screws for Ion Guide Clamp | 1R76913-0316 | All | |
| Q1 Assembly with Wires and Tested | 1R120542-2560 | All | |
| Q1 Exit Endcap | 1R120404-3230 | ISQ All | |
| Q1 Entrance Endcap | 1R120404-3211 | All | |
| Q1 Quad Entrance Lens | 1R120404-3212 | All | |
| Quad 1 Wire Set | 1R120480-0005 | All | |
| Quad 3 Wire Set | 1R120480-0006 | TSQ All | |
| Q3 Quad Assembly | 1R120542-2570 | TSQ All | |
| Q1 Exit Lens Wire | 1R120542-2515 | TSQ All | |
| Q3 Entrance Lens Wire | 1R120542-2514 | TSQ All | |
| Q3 Exit Lens Wire | 1R120542-2513 | TSQ All | |
| Q3 Exit Lens Assembly | 1R120542-2536 | TSQ All | |
| Wire Routing Clip | 1R120542-2511 | TSQ All | |

**Table 1.** Parts That Can Be Reordered, continued

| Component | Thermo Scientific Part Number | Used on Instrument(s) | Category |
|---|---|---|---|
| ISQ Distribution Board | 1R120369-0001 | ISQ All | Board Components |
| TSQ Distribution Board | 1R120485-0810 | TSQ All | |
| Screw for Distribution Board | 1R76913-0310 | All | |
| Q1/Front RF Board | 1R120485-A060 | All | |
| Q3/Rear RF Board | 1R120485-A065 | TSQ All | |
| Q1/Front Rod Driver Board | 1R120485-0415 | All | |
| Q3/Rear Rod Driver Board (75V) | 1R120485-0420 | TSQ All | |
| Standoff for Rod Driver Board | 1R76350-5003 | All | |
| Screw for Rod Driver Board | 1R76913-0310 | All | |
| Lens Driver Board-ISQ | 1R120354-A110 | ISQ All | |
| Lens Driver Board-TSQ | 1R120485-A110 | TSQ 8000, TSQ Duo, TSQ 8000 Evo | |
| TSQ 9000 and TSQ 9610 Lens Driver Board | 1R120485-A114T | TSQ 9000, TSQ 9610 | |
| Controller Interface Board | 1R120485-0020 | ISQ All | |
| Controller Interface Board Support Bracket | 1R120373-0002 | ISQ All | |
| Source Interface Board, ISQ Systems | 1R120354-0210 | ISQ All | |
| Source Interface Board, TSQ Systems | 1R120485-0210 | TSQ All | |
| Heat Shield for AEI Source Interface Board | 1R120189-2111 | TSQ 9610 with NVAEI | |
| Electrometer Board | 1R120354-0500 | All | |
| Screw (6 mm) for Electrometer Board | 1R76913-0306 | All | |
| Screw (16 mm) for Electrometer Board | 1R76913-0316 | All | |
| Heat Shield for Source Interface Board | 1R120404-2110 | All | |
| Screw for Heat Shield | 1R76913-0410 | All | |
| 15-pin Male/Female RS-232 Cable | 1R76396-0500 | All | |
| Electrometer Shield | 1R120368-0010 | All | |
| Screw for Electrometer Shield | 1R76913-0306 | All | |
| O-ring for 4-Pin Feedthrough | 1R3814-127 | All | |
| Screw for 4-Pin Feedthrough | 1R76913-0410 | All | |
| 20-pin Feedthrough | 1R120610-0020 | All | |

**Table 1.** Parts That Can Be Reordered, continued

| Component | Thermo Scientific Part Number | Used on Instrument(s) | Category |
|---|---|---|---|
| O-ring for 20-Pin Feedthrough | 1R3814-123 | All | |
| Screw for 20-Pin Feedthrough | 1R76913-0410 | All | |
| 4-pin Feedthrough | 1R120610-0030 | All | |
| Q1 Rod Driver Fan, 5 VDC | 1R120443-0011 | All | |
| Q1 RF Fan, 60 mm | 1R120443-0002 | All | |
| Q3 RF Fan | 1R120443-0005 | All | |
| PC Communication Board | 1R120595-0010 | All | |
| ISQ Power Supply System | 1R120380-0001 | ISQ All | Power Supply Components |
| TSQ Power Supply System | 1R120544-0002 | TSQ All | |
| Dynode and Multiplier Power Supply and Cables (EI only) | 1R120361-0003 | All | |
| Inner Ball Seal | 1R120406-1008 | All | Vacuum Interlock Components |
| Valve Axle | 1R120406-1003 | All | |
| Axle Seal and O-ring | 1R120406-2204 | All | |
| Axle Bearing | 1R120406-1005 | All | |
| Sealing Ball | 1R120406-1004 | All | |
| Outer Ball Seal | 1R120406-1002 | All | |
| Handle | 1R120406-1200 | All except TSQ 9610 with AEI VPI | |
| Handle, VPI AEI Systems | 1R120189-6020 | TSQ 9610 with NVAEI | |
| Solenoid Valve, 24 V | 1R76461-5002 | All | |
| Barb Fitting, “L” | 1R76256-1332 | All | |
| Barb Fitting, Straight | 1R76256-0040 | All | |
| Valve Spring (pkg of 5) | 1R76485-1001 | All | |
| Vacuum Interlock Knob | 1R120406-3000 | All | |
| Vacuum Interlock Assembly | 1R120403-0001 | All | |
| Tubing (cm) | 1R76433-0107 | All | |
| Vacuum Interlock Microswitch Assembly | 1R120406-1030 | All | |
| Interior O-ring | 1R3814-127 | All | |
| Exterior O-ring | 1R3815-320 | All | |
| Clip (Pkg of 5) | 1R76483-2102 | All | |

**Table 1.** Parts That Can Be Reordered, continued

| Component | Thermo Scientific Part Number | Used on Instrument(s) | Category |
|---|---|---|---|
| Manifold Door Hinge | 1R120565-0001 | All | Manifold Components |
| Front Manifold Plate Assembly, with VPI | 1R120403-0101 | ISQ, ISQ LT, TSQ 8000, TSQ 8000 Evo | |
| Front Manifold Plate Assembly, with VPI | 1R120191-0012 | ISQ 7000 VPI, TSQ 9000 VPI | |
| Front Manifold Plate Assembly, with VPI, AEI | 1R120189-0012 | TSQ 9610 with NVAEI | |
| Front Plate VPI AEI Adapter | 1R120189-2056 | TSQ 9610 with NVAEI | |
| Door Alignment Socket for VPI AEI | 1R120189-2059 | TSQ 9610 with NVAEI | |
| AEI Magnet Rotator | 1R120189-6201 | TSQ 9610 with NVAEI | |
| AEI Lock Plate Replacement | 1R120189-6202 | TSQ 9610 with NVAEI | |
| Front Manifold Plate Assembly, No VPI | 1R120403-0002 | ISQ QD, TSQ Duo | |
| Front Manifold Plate Assembly, No VPI | 1R120191-0013 | ISQ 7000 No VPI, TSQ 9000 No VPI | |
| O-ring for Front, Top, Detector, and Back Plate | 1R3815-360 | All | |
| Screw for Front Plate (M4 × 20 mm) | 1R176913-0420 | All | |
| Vent Valve Knob | 1R120403-0104 | All | |
| Source Insertion Guide | 1R120564-0001 | All | |
| O-ring for Vent Valve Knob | 1R3814-110 | All | |
| Back Tray Alignment Pin | 1R120403-0103 | All | |
| Front Door Alignment Pin | 1R120564-0003 | ISQ, ISQ QD, ISQ LT, TSQ 8000, TSQ 8000 Evo, TSQ Duo | |
| Source Magnet Retainer | 1R120602-0205 | ISQ 7000, TSQ 9000 | |
| Back Manifold Plate | 1R120403-1001 | All | |
| Magnet Yoke | 1R120564-0002 | All | |
| Source Magnet | 1R70001-98195 | ISQ, ISQ QD, ISQ LT, TSQ 8000, TSQ 8000 Evo, TSQ Duo | |

**Table 1.** Parts That Can Be Reordered, continued

| Component | Thermo Scientific Part Number | Used on Instrument(s) | Category |
|---|---|---|---|
| Right Side Panel-ISQ old | 1R120413-0001 | ISQ, ISQ QD, ISQ LT | Cover Components |
| Right Side Panel-ISQ 7000 | 1R120191-1020 | ISQ 7000 | |
| Left Side Panel-ISQ | 1R120411-0001 | ISQ All | |
| Top Cover Panel-ISQ | 1R120412-0001 | ISQ All | |
| Top Manifold Cover (glass) | 1R120401-3000 | ISQ All | |
| ISQ 7610 Front Cover (with VPI) | 1R120191-0110 | ISQ 7610 with VPI | |
| ISQ 7610 Front Cover (no VPI) | 1R120191-0210 | ISQ 7610 no VPI | |
| ISQ Front Cover (with VPI) | 1R120407-0100 | ISQ, ISQ LT | |
| ISQ Front Cover (No VPI) | 1R120407-0200 | ISQ QD | |
| ISQ 7000 Front Cover (with VPI) | 1R120191-0100 | ISQ 7000 with VPI | |
| ISQ 7000 Front Cover (no VPI) | 1R120191-0200 | ISQ 7000 no VPI | |
| Large Top Glass Cover-TSQ | 1R120542-3000 | TSQ All | |
| Small Top Glass Cover-TSQ | 1R120401-3000 | TSQ All | |
| Right Side Panel-TSQ | 1R120541-0200 | TSQ All | |
| Left Hand Front Panel-TSQ | 1R120541-0003 | TSQ All | |
| Left Hand Sub Panel-TSQ | 1R120541-0500 | TSQ All | |
| Top Cover Panel-TSQ | 1R120541-0001 | TSQ All | |
| TSQ 9610 Front Cover (with VPI) | 1R120192-0120 | TSQ 9610 with VPI | |
| TSQ 9610 Front Cover (no VPI) | 1R120192-0220 | TSQ 9610 no VPI | |
| TSQ 9610 Front Cover (with AEI VPI) | 1R120189-0121 | TSQ 9610 with NVAEI | |
| TSQ 8000 Evo Front Cover (with VPI) | 1R120548-0300 | TSQ 8000 Evo no VPI | |
| TSQ 8000 Evo Front Cover (no VPI) | 1R120548-0400 | TSQ 8000 Evo with VPI | |
| TSQ Duo Front Cover | 1R120548-0200 | TSQ Duo | |
| TSQ 9000 Front Cover (with VPI) | 1R120192-0100 | TSQ 9000 with VPI | |
| TSQ 9000 Front Cover (no VPI) | 1R120192-0200 | TSQ 9000 no VPI | |
| Front Door Hinge | 1R3434-5000 | All | |
| Front Door Hinge Support | 1R120445-0001 | All | |
| Front Door Latch | 1R76483-3000 | All | |
| Right Side Panel Feet | 1R3666-0207 | All | |
| Chassis Foot | 1R3666-0206 | All | |

**Table 1.** Parts That Can Be Reordered, continued

| Component | Thermo Scientific Part Number | Used on Instrument(s) | Category |
|---|---|---|---|
| Small Turbomolecular Pump | 1R119268-0004 | ISQ All | Pump Components |
| Medium Turbomolecular Pump | 1R119268-0003 | TSQ 9000 | |
| Large Turbomolecular Pump | 1R119268-0002 | All | |
| Rough Pump (RV3) | 1R76505-3007 | All | |
| Dry Scroll Pump | 120256-0001 | All | |
| Vacuum Pump Oil | A0301-15101 | All | |
| Convectron Gauge | A0105-00501 | All | |
| Foreline Adapter | 1R119244-0025 | All | |

**Table 1.** Parts That Can Be Reordered, continued

| Component | Thermo Scientific Part Number | Used on Instrument(s) | Category |
|---|---|---|---|
| Bushing in the Source Exchange | 1R120406-2203 | All | MS System Tools |
| Seal in the Source Exchange Tool | 1R120406-2204 | All | |
| Clip in the Source Exchange Tool | 1R76483-2102 | All | |
| Source Exchange Tool | 1R120406-2000 | All | |
| Source Holder | 1R120471-0001 | All except AEI MS Systems | |
| Source Holder, NVAEI MS systems | 1R120189-2023 | TSQ 9610 with NVAEI | |
| T30 Torxhead Key | 1R3812-5T30 | All | |
| MS Toolkit, which includes: | 1R120467-0001 | All No VPI MS Systems | |
| • Source Removal Tool (Small) | 1R120406-2250 | All No VPI MS Systems | |
| • Column Measurement Tool | 1R120461-0010 | All | |
| • T10 Torxhead Key | 1R3812-5T10 | All | |
| • T20 Torxhead Key | 1R3812-5T20 | All | |
| • Forceps, 8 in. | 1R76360-0008 | All | |
| • Wrench, Open-Ended, 1/4-in., 5/16-in. | 1R76360-0109 | All | |
| • Wrench, Open-Ended, 3/8 in., 7/16-in. | 1R76360-0108 | All | |
| VPI MS Toolkit, which includes: | 1R120467-0002 | ISQ, ISQ LT, TSQ 8000, TSQ 8000 Evo | |
| • Source Removal Tool (Small) | 1R120406-2250 | ISQ, ISQ LT, TSQ 8000, TSQ 8000 Evo | |
| • Column Measurement Tool | 1R120461-0010 | All | |
| • Source Exchange Tool | 1R120406-2000 | ISQ, ISQ LT, TSQ 8000, TSQ 8000 Evo | |
| • Source Holder | 1R120471-0001 | All except NVAEI MS Systems | |
| • T10 Torxhead Key | 1R3812-5T10 | All | |
| • T20 Torxhead Key | 1R3812-5T20 | All | |
| • T30 Torxhead Key | 1R3812-5T30 | All | |

**Table 1.** Parts That Can Be Reordered, continued

| Component | Thermo Scientific Part Number | Used on Instrument(s) | Category |
|---|---|---|---|
| • Forceps, 8 in. | 1R76360-0008 | All | MS System Tools |
| • Wrench, Open-Ended, 1/4-in., 5/16-in. | 1R76360-0109 | All | |
| • Wrench, Open-Ended, 3/8 in., 7/16-in. | 1R76360-0108 | All | |
| ISQ 7000, ISQ 7610, TSQ 9000, and TSQ 9610 VPI MS Toolkit, includes everything in VPI MS Toolkit and: | 1R120467-0004 | ISQ 7000, ISQ 7610, TSQ 9000, TSQ 9610 except TSQ 9610 with NVAEI | |
| • Source Plug | 1R120589-2000 | ISQ 7000, ISQ 7610, TSQ 9000, TSQ 9610 except TSQ 9610 with NVAEI | |
| • Source Plug O-ring | 1R3816-202 | ISQ 7000, ISQ 7610, TSQ 9000, TSQ 9610 except TSQ 9610 with NVAEI | |
| • Source Plug Holder | 1R120589-1050 | ISQ 7000, ISQ 7610, TSQ 9000, TSQ 9610 except TSQ 9610 with NVAEI | |
| NVAEI MS Toolkit | 1R120189-6200 | TSQ 9610 with NVAEI | |
| • NVAEI Source Exchange Tool | 1R120189-0003 | TSQ 9610 with NVAEI | |
| • NVAEI Source Holder | 1R120189-2303 | TSQ 9610 with NVAEI | |
| • NVAEI Manual Source Removal Tool | 1R120189-1017 | TSQ 9610 with NVAEI | |
| • NVAEI Source Plug | 1R120189-6011 | TSQ 9610 with NVAEI | |
| • Column Measurement Tool | 1R120461-0010 | All | |
| • T10 Torxhead Key | 1R3812-5T10 | All | |
| • T20 Torxhead Key | 1R3812-5T20 | All | |
| • Forceps, 8 in. | 1R76360-0008 | All | |
| • Wrench, Open-Ended, 1/4-in., 5/16-in. | 1R76360-0109 | All | |
| • Wrench, Open-Ended, 3/8 in., 7/16-in. | 1R76360-0108 | All | |

**Table 1.** Parts That Can Be Reordered, continued

| Component | Thermo Scientific Part Number | Used on Instrument(s) | Category |
|---|---|---|---|
| CI Reagent Gas Flow Module | 1R23331-0092 | All | Upgrade Equipment |
| CI Ion Volume | 1R120404-4112 | All | |
| CI Ion Source Cartridge Assembly (Low Activity) | 1R120404-4500 | All | |
| CI Gas Line | 1R120438-0020 | All | |
| EI/CI Ion Volume | 1R120404-4113 | All | |
| Hydrogen Ion Volume | 1R120404-4115 | All | |
| Dynode and Multiplier Power Supply and Cables (EI/CI) | 1R120361-0007 | All | |
| Ion Gauge Option | 1R120560-0020 | All | |
| Ion Gauge Controller PCB | 1R120485-0120 | All | |
| Ion Gauge Mount | 1R120416-0002 | All | |
| Ion Gauge Tube Shield | 1R119605-0012 | All | |
| Extended Capacity Turbomolecular Pump | 1R119268-0002 | All | |
| Dust Filters | 1R120442-1000 | All | |
| Direct Insert Probe (without case) | 1R120406-4000 | All VPI Systems | |
| Direct Exposure Probe (without case) | 1R120406-5000 | All VPI Systems | |
| Direct Insert Probe Controller Kit | 1R119300-0500 | All VPI System | |
| Direct Exposure Probe Controller Kit | 1R119300-0600 | All VPI System | |
| AEI Ion Source Cartridge, which includes: | 1R120602-1300 | ISQ 7000, ISQ 7610, TSQ 9000, TSQ 9610 | |
| • AEI Ion Volume | 1R120602-0104 | ISQ 7000, ISQ 7610, TSQ 9000, TSQ 9610 | |
| • Dual Filament | 1R120404-1940 | All | |
| • AEI Filament Spacer | 1R120602-0103 | ISQ 7000, ISQ 7610, TSQ 9000, TSQ 9610 | |
| • AEI Filament Retainer | 1R120602-0102 | ISQ 7000, ISQ 7610, TSQ 9000, TSQ 9610 | |
| • AEI Ion Volume-Repeller Insulator | 1R120602-0106 | IISQ 7000, ISQ 7610, TSQ 9000, TSQ 9610 | |
| • AEI Filament Shield | 1R120602-0105 | ISQ 7000, ISQ 7610, TSQ 9000, TSQ 9610 | |

**Table 1.** Parts That Can Be Reordered, continued

| Component | Thermo Scientific Part Number | Used on Instrument(s) | Category |
|---|---|---|---|
| • AEI Ion Source Sleeve | 1R120602-0101 | ISQ 7000, ISQ 7610, TSQ 9000, TSQ 9610 | |
| • AEI Filament Insulator | 1R120602-0108 | ISQ 7000, ISQ 7610, TSQ 9000, TSQ 9610 | |
| • Lens 3/RF Lens | 1R120574-0103 | All | |
| • Lens 2 | 1R120404-1140 | All | |
| NeverVent AEI Ion Source Cartridge, which includes: | 1R120189-6030 | TSQ 9610 with NVAEI | |
| • NeverVent AEI Ion Volume | 1R120189-2001 | TSQ 9610 with NVAEI | |
| • NeverVent AEI Dual Filament Assembly | 1R120189-6000 | TSQ 9610 with NVAEI | |
| • NeverVent AEI Ion Cartridge Sleeve | 1R120189-2000 | TSQ 9610 with NVAEI | |
| • NeverVent AEI Filament Insulator | 1R120189-2036 | TSQ 9610 with NVAEI | |
| • NeverVent AEI Cap | 1R120189-2035 | TSQ 9610 with NVAEI | |
| • NeverVent AEI Filament Spring | 1R120189-3002 | TSQ 9610 with NVAEI | |
| • AEI Filament Shield | 1R120602-0105 | ISQ 7000, ISQ 7610, TSQ 9000, TSQ 9610 | |
| • Lens 3/RF Lens | 1R120574-0103 | All | |
| • Lens 2 | 1R120404-1140 | All | |
| AEI Front Plate Assembly | 1R120191-0014 | ISQ 7000, ISQ 7610, TSQ 9000, TSQ 9610 | Upgrade Equipment |
| AEI Case Insert | 1R120602-1100 | ISQ 7000, ISQ 7610, TSQ 9000, TSQ 9610 | |
| AEI Case | 1R76524-0020 | ISQ 7000, ISQ 7610, TSQ 9000, TSQ 9610 | |
| AEI Magnet Retainer Bracket | 1R120602-1104 | ISQ 7000, ISQ 7610, TSQ 9000, TSQ 9610 | |
| AEI Magnet | 1R76253-2000 | ISQ 7000, ISQ 7610, TSQ 9000, TSQ 9610 | |
| AEI Source Magnet Assembly | 1R120602-0200 | ISQ 7000, ISQ 7610, TSQ 9000, TSQ 9610 | |

**Table 1.** Parts That Can Be Reordered, continued

| Component | Thermo Scientific Part Number | Used on Instrument(s) | Category |
|---|---|---|---|
| MS Installation Kit | 1R120459-0001 | All | Other |
| Test Column | 26070-1300 | All | |
| ISQ Specification Standards | 1R120150-PERF | ISQ All | |
| ISQ Series Instrument Control Software | 1R120479-0003 | ISQ All | |
| TSQ Specification Standards | 1R120540-PERF | TSQ All | |
| TSQ Series Software | 1R120579-0031 | TSQ All | |
| Fuse Kit, which includes: | 1R120458-0001 | All | |
| • Fuse, Fast Acting 500 mA, 250 V, 5 × 20 (pkg of 2) | | | |
| • Fuse, Fast Acting 1.0 A, 250 V, 5 × 20 (pkg of 2) | | | |
| • Fuse, Fast Acting 1.6 A, 250 V, 5 × 20 (pkg of 2) | | | |
| • Fuse, Fast Acting 2.5 A, 250 V, 5 × 20 (pkg of 2) | | | |
| • Fuse, Fast Acting 5.0 A, 250 V, 5 × 20 (pkg of 2) | | | |
| • Fuse, Fast Acting 6.3 A, 250 V, 5 × 20 (pkg of 2) | | | |
| Consumables Kit | 1R120468-CONSUM | All | |
| Aluminum Oxide | 1R32000-60340 | All | |
| Cardinal Health CP100 Nitrile Cleanroom Gloves (Recommended to avoid contaminating instrument) | Fisher Scientific Catalog Number | All | Gloves |
| Size X-Small (Case) | 19-120-2947 | All | |
| Size Small (Case) | 19-120-2947A | All | |
| Size Medium (Case) | 19-120-2947B | | |
| Size Large (Case) | 19-120-2947C | | |
| Size X-Large (Case) | 19-120-2947D | | |

**Table 1.** Parts That Can Be Reordered, continued

| Component | Thermo Scientific Part Number | Used on Instrument(s) | Category |
|---|---|---|---|
| MS Screw Kit, which includes: | 1R120480-0014 | All | — |
| • M3 x 6 mm Screw (pkg of 10) | | | |
| • M3 x 8 mm Screw (pkg of 10) | | | |
| • M3 x 10 mm Screw (pkg of 5) | | | |
| • M3 x 12 mm Screw (pkg of 5) | | | |
| • M3 x 16 mm Screw (pkg of 5) | | | |
| • M4 x 16 mm Screw (pkg of 5) | | | |
| • M4 x 20 mm Screw (pkg of 10) | | | |
| • M4 x 10 mm Screw (pkg of 10) | | | |
| • M3 x 8 mm Screw for Hinges (pkg of 5) | | | |
| • M4 x 8 mm Screw for Power Supply (pkg of 5) | | | |
| • M3 Locking Nut for Front Door Latch (pkg of 2) | | | |
| • M3 x 25mm Standoff for RF Board (pkg of 2) | | | |

* All of the screws in this table must be cleaned before you install them inside the vacuum manifold. See *Cleaning Durable Components* in the *ISQ 7000 Hardware Manual* or *TSQ 9000 Hardware Manual* for details.

# Calibration Gas Components

You can purchase the following calibration gas components for the ISQ or TSQ GS-MS instruments mass spectrometer. Be sure to include the component's part number when placing an order with your local Sales/Service Representative. See the hardware manual for information about installing these components or Table 1 for a list of available components.

The following calibration gas components can be replaced on the ISQ or TSQ GS-MS instrument.

- Transfer Line Assembly (New)
- Transfer Line (Previous Model)
- Single-Level Calibration Gas Module
- Dual-Level Calibration Gas Module
- Calibrant Reservoir Kit
- Gas Mixing Chamber (Legacy)
- Gas Mixing Chamber
- Source Gas Tube
- Calibration Gas Line
- FC-43 Calibration Compound
- 1 fg/µL OFN IDL Kit
- 5 fg/µL OFN in Iso-octane

**Figure 1.** Replaceable Calibration Gas Components-ISQ, ISQ QD, IST LT, TSQ 8000, TSQ 8000 Evo, TSQ Duo

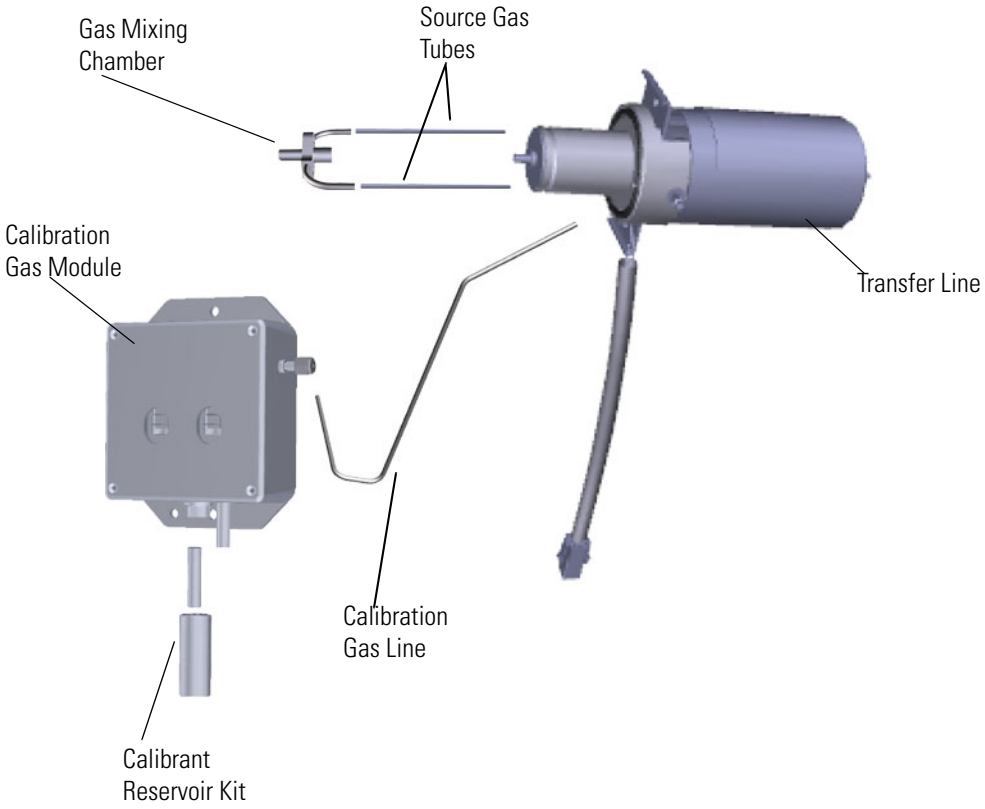

**Figure 2.** Calibration Gas Components-ISQ 7000, ISQ 7610, TSQ 9000, and TSQ 9610 Instruments

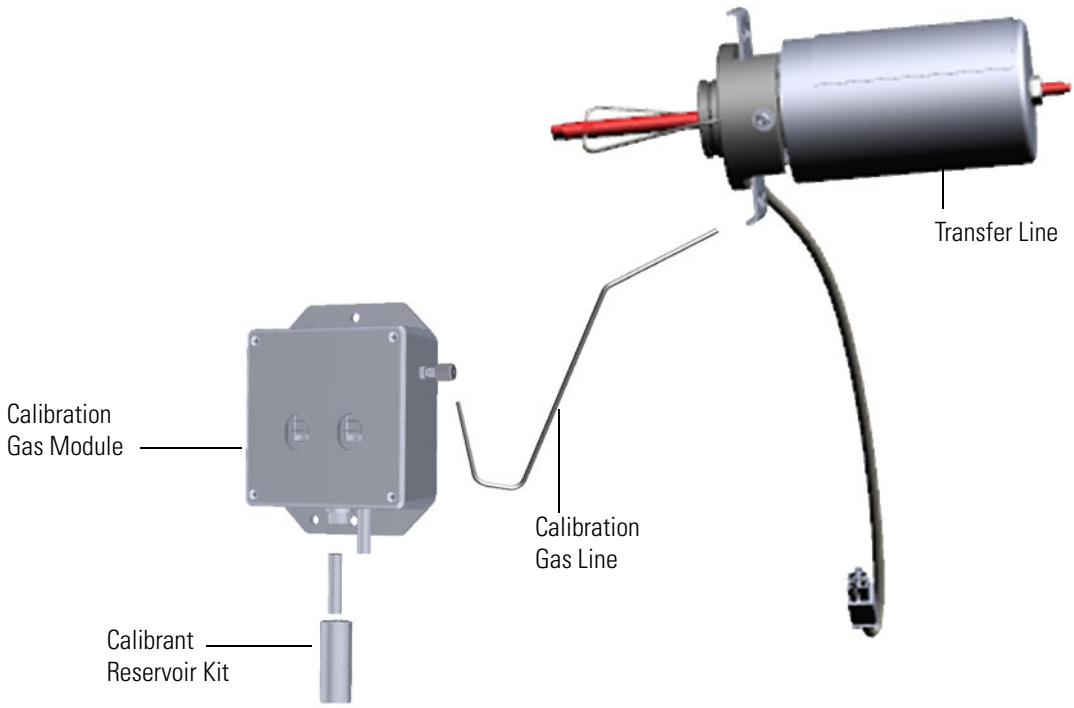

| Transfer Line Assembly (New) | Quantity: Each |
|---|---|
| | System:<br>ISQ 7000,TSQ 9000,<br>ISQ 7610, TSQ 9610 |

| Thermo Scientific Part Number | 1R120191-0020 |
|---|---|

| Transfer Line (Previous Model) | Quantity: Each |
|---|---|
| | System: ISQ, ISQ LT, ISQ QD, TSQ 8000, TSQ 8000 Evo, TSQ Duo |
| **Thermo Scientific Part Number** | **1R120402-0001** |

NOTE: To replace all the M4 x 10 mm screws on the transfer line, order two of PN 1R76913-0410. To replace the o-ring on the transfer line, order PN 1R3814-223. PN 1R120402-0001 includes one o-ring initially.

| Single-Level Calibration Gas Module | Quantity: Each |
|---|---|
| | System: All |

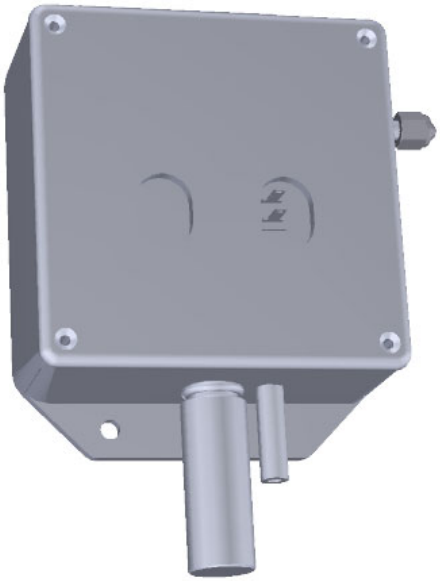

| Thermo Scientific Part Number | 1R119246-0004 |
|---|---|

NOTE: To replace all the M4 x 10 mm screws on the calibration controller, order two of PN 1R76913-0410.

| Dual-Level Calibration Gas Module | Quantity: Each |
|---|---|
| | System: All |

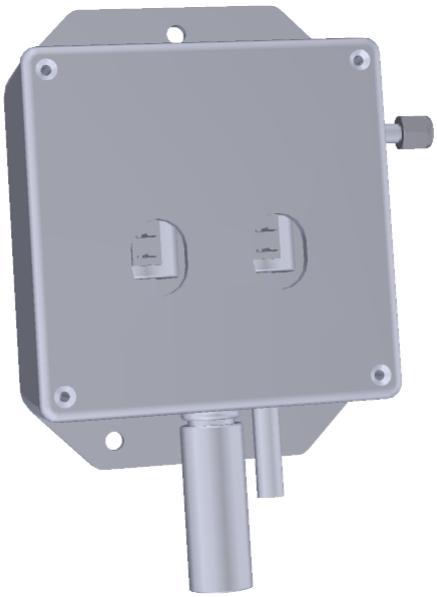

| Thermo Scientific Part Number | 1R119246-0003 |
|---|---|

NOTE: To replace all the M4 x 10 mm screws on the calibration controller, order two of PN 1R76913-0410.

| Calibrant Reservoir Kit | Quantity: Each |
|---|---|
| | System: All |
| **Thermo Scientific Part Number** | **1R120433-0001** |

| Gas Mixing Chamber (Legacy) | Quantity: Each |
|---|---|
| 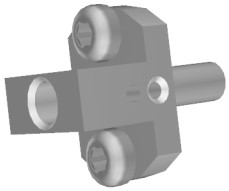 | System: ISQ, TSQ 8000 |
| **Thermo Scientific Part Number** | **1R120404-1201** |

NOTE: To replace all the M3 x 8 mm screws on the gas mixing chamber, order two of PN 1R76913-0306. This part is replaced with 1R120574-0054 and 1R120574-0055.

| Gas Mixing Chamber | Quantity: Each |
|---|---|
| 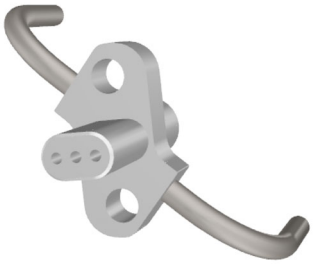 | System: ISQ, ISQ LT, ISQ QD, TSQ 8000, TSQ 8000 Evo, TSQ Duo |
| **Thermo Scientific Part Number** | **1R120574-0054** |

NOTE: To replace all the M3 x 8 mm screws on the gas mixing chamber, order two of PN 1R76913-0308.

**Note** The Gas Mixing Chamber (PN 1R120574-0054), two Source Gas Tubes (PN 1R120574-0055), and two M3 × 8 mm screws (PN 1R176913-0308) can be ordered as a kit. To purchase the Gas Mixing Chamber Kit, order PN 1R120574-KIT.

| Source Gas Tube | Quantity: Each |
|---|---|
| | System: ISQ, ISQ LT, ISQ QD, TSQ 8000, TSQ 8000 Evo, TSQ Duo |
| **Thermo Scientific Part Number** | **1R120574-0055** |

| Calibration Gas Line | Quantity: Each |
|---|---|
| | System: All |
| **Thermo Scientific Part Number** | **1R120438-0010** |

| FC-43 Calibration Compound | Quantity: Each |
|---|---|
| | System: All |
| **Thermo Scientific Part Number** | **1R50010-30059** |

| 1 fg/µL OFN IDL Kit | Quantity: Each |
|---|---|
| | System: ISQ 7000,TSQ 9000, ISQ 7610, TSQ 9610 |
| **Thermo Scientific Part Number** | **1R76310-0101K** |

| 5 fg/µL OFN in Iso-octane | Quantity: Each |
|---|---|
| | System:<br>ISQ 7000,TSQ 9000,<br>ISQ 7610, TSQ 9610 |
| **Thermo Scientific Part Number** | **1R76310-0105** |

# Collision Gas Components

You can purchase the following collision gas components for the TSQ GC-MS systems. Be sure to reference the component's part number when placing an order with your local Sales/Service Representative. See the *TSQ 9000 Hardware Manual* for information about installing these components or Table 1 for a comprehensive list of available components.

The following collision gas components can be replaced on your mass spectrometer.

- Collision Gas Module
- Tube Fitting, Collision Gas Module to Manifold
- Collision Gas Tube
- Tee, 1/8 in.

| **Collision Gas Module** | **Quantity: Each** |
|---|---|
| 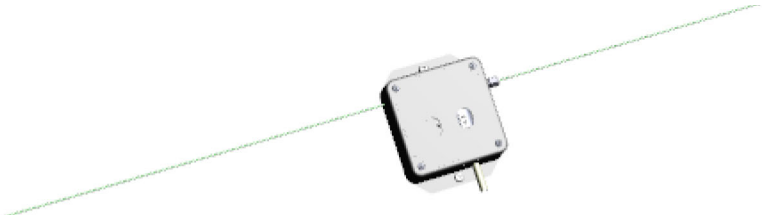 | System: TSQ All |
| **Thermo Scientific Part Number** | **1R119246-0005** |

NOTE: This PN includes the module cable (PN 1R119378-0071), tubing (PN 1R120557-0030), and 1/8 in. tee (PN 1R76256-0126).

| **Tube Fitting, Collision Gas Module to Manifold** | **Quantity: Each** |
|---|---|
| 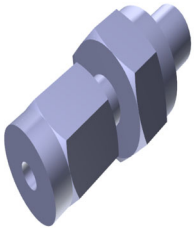 | TSQ All |
| **Thermo Scientific Part Number** | **1R76256-0045** |

| Collision Gas Tube | Quantity: Each |
|---|---|
| 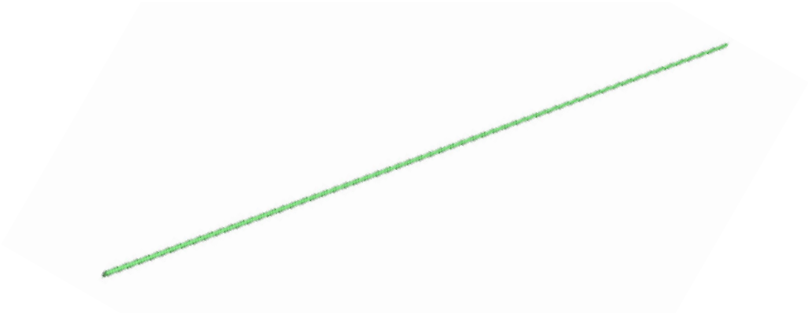 | TSQ All |
| **Thermo Scientific Part Number** | **1R120557-0030** |

| Tee, 1/8 in. | Quantity: Each |
|---|---|
| | TSQ All |
| **Thermo Scientific Part Number** | **1R76256-0126** |

# Column Components

You can purchase the following column components for the ISQ or TSQ GC-MS instrument. Be sure to include the component's part number when placing an order with your local Sales/Service Representative. See the hardware manuals for your instrument for information about installing these components or Table 1 for a comprehensive list of available components.

The following column components can be replaced on the ISQ or TSQ GC-MS instrument.

- Graphite Vespel Ferrule for 0.18 mm Columns
- Graphite Vespel Ferrule for 0.25 mm Columns
- Graphite Vespel Ferrule for 0.32 mm Columns
- Graphite Vespel Ferrule for 0.53 mm Columns
- 2-hole Graphite Vespel Ferrule for <0.32mm Columns
- No-Hole Graphite Vespel Ferrule
- SilTite Ferrule for 0.25 mm Columns
- SilTite Ferrule for 0.32mm Columns
- SilTite Ferrule for 0.53mm Columns
- Nut for SilTite Ferrules
- Nickel-Coated Nut for Graphite Vespel Ferrules
- Spring-loaded Transfer Line Nut
- Graphite Ferrules for 0.1–0.25 mm Columns used with Spring-loaded Transfer Line Nut

**Note** The parts in this chapter are compatible with all GC-MS systems.

| **Graphite Vespel Ferrule for 0.18 mm Columns** | **Quantity: Pkg of 10** |
|---|---|

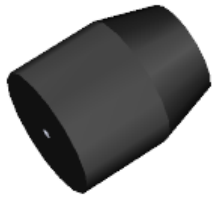

| **Thermo Scientific Part Number** | **1R76458-2016** |
|---|---|

| Graphite Vespel Ferrule for 0.25 mm Columns | Quantity: Pkg of 10 |
|---|---|

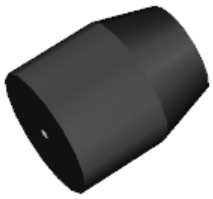

| Thermo Scientific Part Number | 29033496 |
|---|---|

| Graphite Vespel Ferrule for 0.32 mm Columns | Quantity: Pkg of 10 |
|---|---|

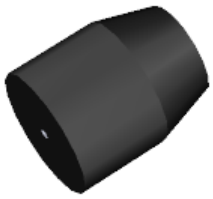

| Thermo Scientific Part Number | 1R76458-2019 |
|---|---|

| Graphite Vespel Ferrule for 0.53 mm Columns | Quantity: Pkg of 10 |
|---|---|

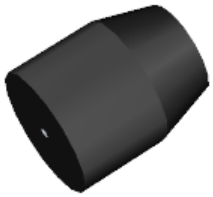

| Thermo Scientific Part Number | 1R76458-2020 |
|---|---|

| 2-hole Graphite Vespel Ferrule for <0.32mm Columns | Quantity: Pkg of 10 |
|---|---|

**All**

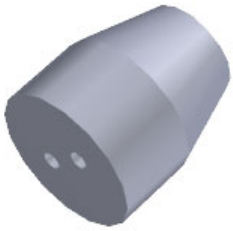

| Thermo Scientific Part Number | 1R76458-2018 |
|---|---|

| No-Hole Graphite Vespel Ferrule | Quantity: Pkg of 10 |
|---|---|

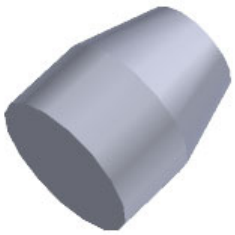

| Thermo Scientific Part Number | 1R76458-2009 |
|---|---|

| SilTite Ferrule for 0.25 mm Columns | Quantity: Pkg of 10 |
|---|---|

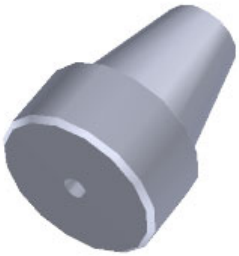

| Thermo Scientific Part Number | 1R76458-2000 |
|---|---|

| SilTite Ferrule for 0.32mm Columns | Quantity: Pkg of 10 |
|---|---|

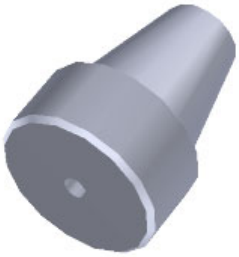

| Thermo Scientific Part Number | 1R76458-2024 |
|---|---|

| SilTite Ferrule for 0.53mm Columns | Quantity: Pkg of 10 |
|---|---|

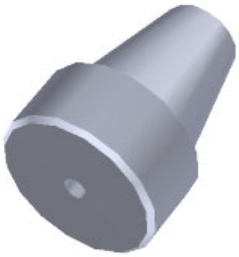

| Thermo Scientific Part Number | 1R76458-2026 |
|---|---|

| Nut for SilTite Ferrules | Quantity: Pkg of 5 |
|---|---|

| Thermo Scientific Part Number | 1R76458-2001 |
|---|---|

| Nickel-Coated Nut for Graphite Vespel Ferrules | Quantity: Pkg of 5 |
|---|---|

| Thermo Scientific Part Number | 1R76256-0060 |
|---|---|

| Spring-loaded Transfer Line Nut | Quantity: Each |
|---|---|

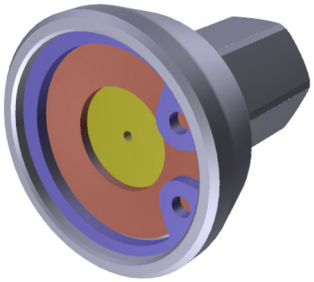

| Thermo Scientific Part Number | 1R120434-0010 |
|---|---|

| Graphite Ferrules for 0.1–0.25 mm Columns used with Spring-loaded Transfer Line Nut | Quantity: Pkg of 10 |
|---|---|

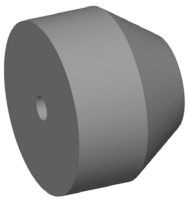

| Thermo Scientific Part Number | 290VA191 |
|---|---|

# Fan and Filter Components

You can purchase the following filter components for the ISQ and TSQ GC-MS systems. Be sure to include the component's part number when placing an order with your local Sales/Service Representative. See the hardware manual for your instrument for information about installing these components or Table 1 for a comprehensive list of available components.

The following fan and filter components can be replaced.

- Intake Filters/RF Shields
- Chassis Cooling Fan
- Oil Mist Filter
- Turbo Cooling Fan
- Fan Plenum
- Left Rear Wire Mesh Filter
- Front Wire Mesh Filter
- Air Deflector

| **Intake Filters/RF Shields** | **Quantity: Each** |
|---|---|
| | System: All |

| **Thermo Scientific Part Number** | **1R76475-5000** |
|---|---|

NOTE: The ISQ Series instrument has two intake filters, so to replace them, order two of PN 1R76475-5000. To replace all the M3 x 8 mm screws on the filters, order eight of PN 1R76913-0308.

| Chassis Cooling Fan | Quantity: Each |
|---|---|
| | System: All |

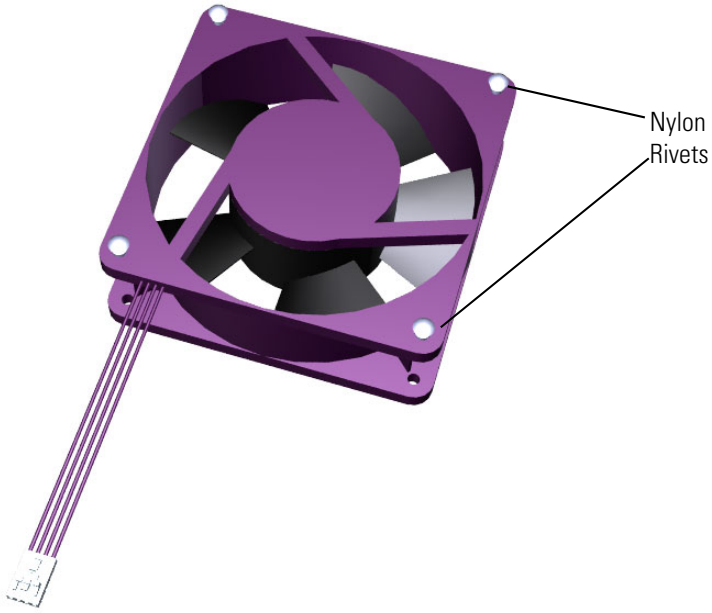


| Thermo Scientific Part Number | 1R120443-0001 |
|---|---|

NOTE: To replace all of the nylon rivets on the chassis cooling fan, order four of PN 1R3326-5000.

| Oil Mist Filter | Quantity: Each |
|---|---|
| | System: All |

| Thermo Scientific Part Number | 1R76505-0036 |
|---|---|

| Turbo Cooling Fan | Quantity: Each |
|---|---|
| 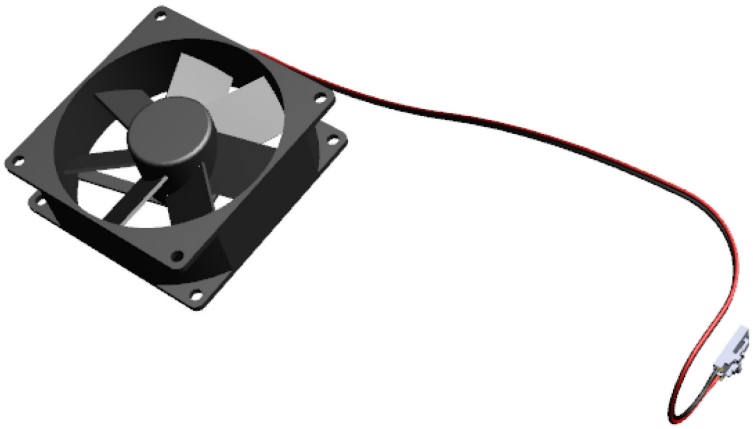 | System: TSQ All |
| **Thermo Scientific Part Number** | **1R120443-0003** |

| Fan Plenum | Quantity: Each |
|---|---|
| 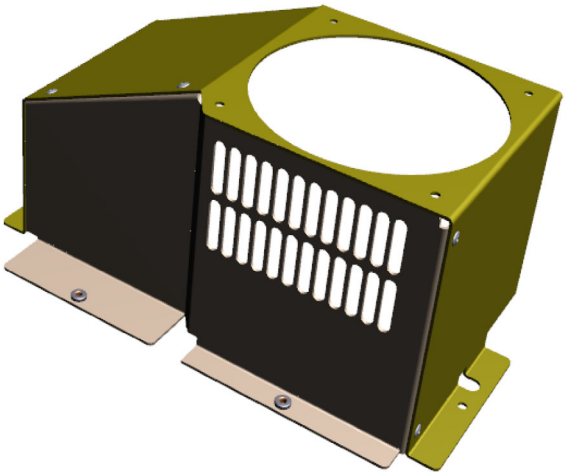 | System: TSQ All |
| **Thermo Scientific Part Number** | **1R120553-0020** |

| Left Rear Wire Mesh Filter | Quantity: Each |
|---|---|
| 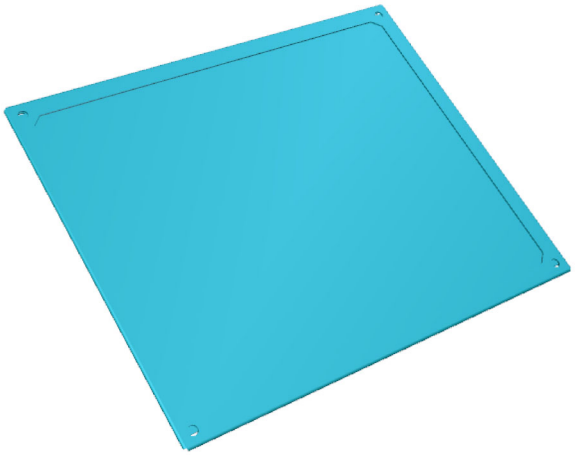 | System: TSQ All |
| **Thermo Scientific Part Number** | **1R120554-0020** |

| Front Wire Mesh Filter | Quantity: Each |
|---|---|
| 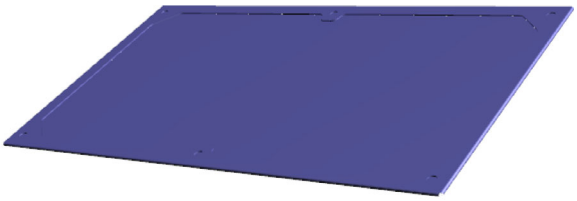 | System: TSQ All |
| **Thermo Scientific Part Number** | **1R120554-0010** |

| Air Deflector | Quantity: Each |
|---|---|
| 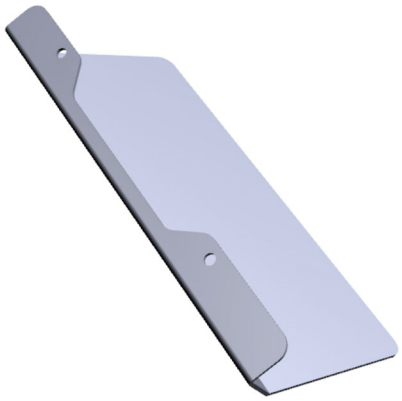 | System: TSQ All |
| **Thermo Scientific Part Number** | **1R120552-0010** |

# Ion Source Components

The following ion source components can be replaced on the ISQ and TSQ GC-MS systems. Be sure to include the component's part number when placing your order. See the hardware manual for your instrument for information about installing these components or Table 1 for a comprehensive list of available components.

- Ion Source Block (Old)
- ISQ 7000, ISQ 7610, TSQ 9000 and TSQ 9610 Ion Source Block
- TSQ 9610 with NVAEI Ion Source Block
- Repeller Plate
- Source-Repeller Thumbscrew (Old)
- ISQ 7000, ISQ 7610, TSQ 90000 and TSQ 9610 Source-Repeller Thumbscrew
- Thumbscrew-Repeller Spacer
- Insulating Spacer
- Lens/Source Heater
- Lens Heater Block
- Lens Heater Block Grounding Strap
- Lens Plate and Springs
- Source to Ion Guide Spacer
- EI Ion Source Cartridge (Low Activity)
  - Ion Cartridge Sleeve
  - EI Ion Volume (Low Activity)
  - Ion Volume-Repeller Insulator
  - Repeller (Low Activity)
  - Ion Volume Locking Ring
  - Repeller Spring
  - Repeller Nut
  - Lens 3/RF Lens
  - Lens 1
  - Lens 2

**Table 2.** Replaceable Components of the Ion Source

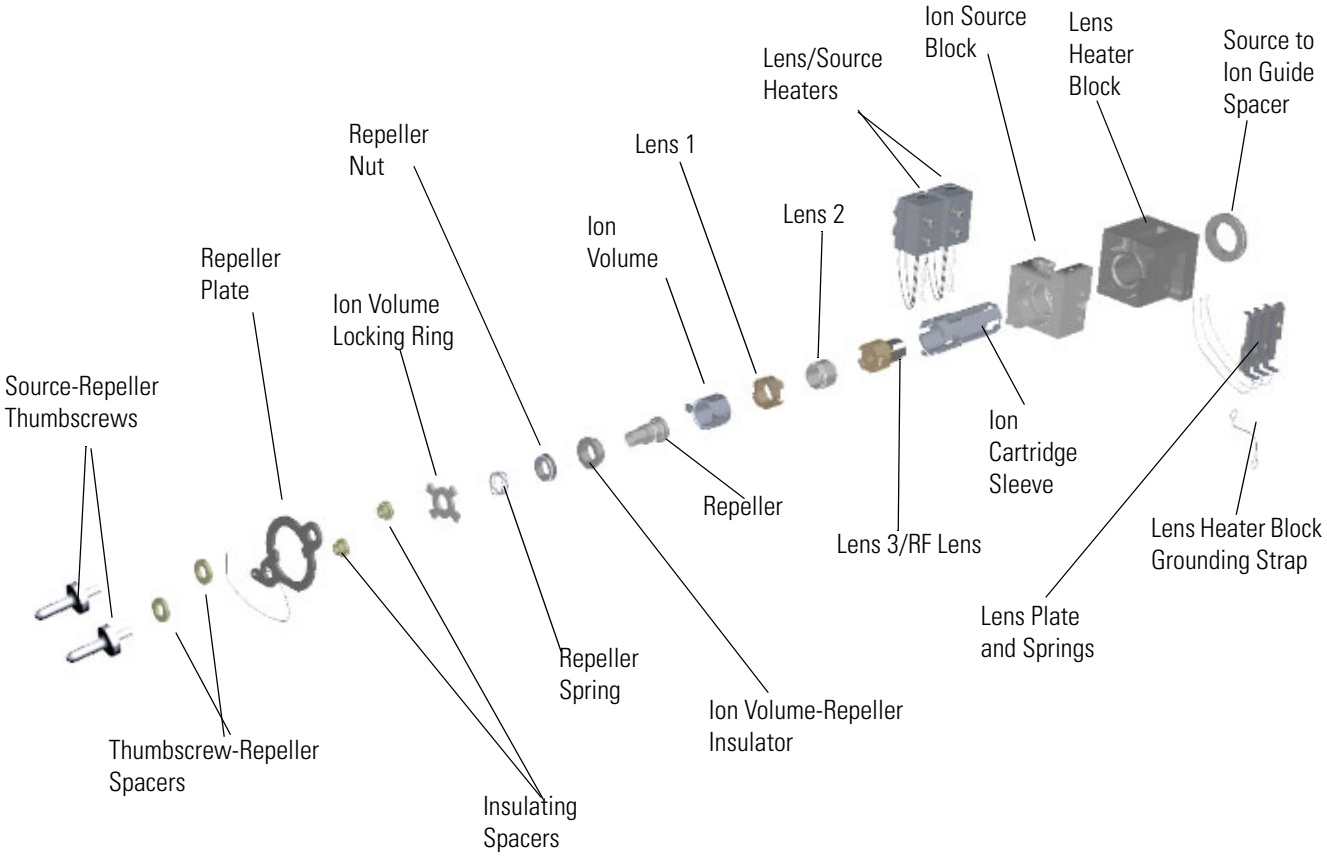

| Ion Source Block (Old) | Quantity: Each |
|---|---|
| 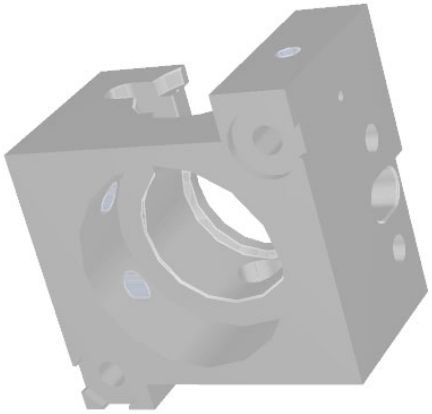 | System: ISQ, ISQ LT, ISQ QD, TSQ Duo, TSQ 8000, TSQ 8000 Evo |
| **Thermo Scientific Part Number** | **1R120404-1311** |

| ISQ 7000, ISQ 7610, TSQ 9000 and TSQ 9610 Ion Source Block | Quantity: Each |
|---|---|
| | System: ISQ 7000, ISQ 7610, TSQ 9000, and TSQ 9610 without AEI |
| **Thermo Scientific Part Number** | **1R120191-2000** |

| TSQ 9610 with NVAEI Ion Source Block | Quantity: Each |
|---|---|
| 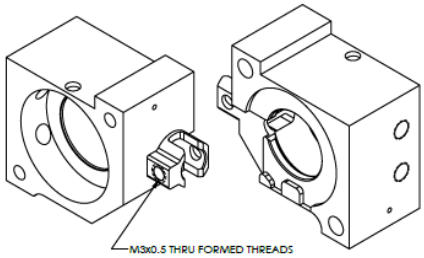  | System: TSQ 9610 with NVAEI |
| **Thermo Scientific Part Number** | **1R120189-2024** |

| Repeller Plate | Quantity: Each |
|---|---|
| | System: All |
| **Thermo Scientific Part Number** | **1R120404-1312** |

| Source-Repeller Thumbscrew (Old) | Quantity: Each |
|---|---|
| | System: ISQ |
| **Thermo Scientific Part Number** | **1R120404-1400** |

| Source-Repeller Thumbscrew (Old) | Quantity: Each |
|---|---|
| 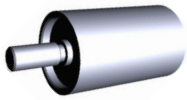 | System: ISQ, ISQ LT, ISQ QD, TSQ 8000, TSQ 8000 Evo, TSQ Duo |
| **Thermo Scientific Part Number** | **1R120564-0004** |

**Note** If your instrument has a source insertion guide, order two of PN 1R120564-0003. If your instrument was not manufactured with a source insertion guide, order two of PN 1R120404-1400. See Manifold Components to determine if your instrument was manufactured with a source insertion guide.

| ISQ 7000, ISQ 7610, TSQ 90000 and TSQ 9610 Source-Repeller Thumbscrew | Quantity: Each |
|---|---|
| | System: ISQ 7000, ISQ 7610, TSQ 9000, and TSQ 9610 |
| **Thermo Scientific Part Number** | **1R120602-0206** |

| Thumbscrew-Repeller Spacer | Quantity: Each |
|---|---|
| | System: All |
| **Thermo Scientific Part Number** | **1RTSLI053A** |

NOTE: There are two thumbscrew-repeller spacers on the ion source, so to replace them, order two of PN 1RTSLI053A.

| Insulating Spacer | Quantity: Each |
|---|---|
| | System: All except TSQ 9610 with AEI |
| **Thermo Scientific Part Number** | **1RTSLI050A** |

NOTE: There are two insulating spacers on the ion source, so to replace them, order two of PN 1RTSLI050A.

| Lens/Source Heater | Quantity: Each |
|---|---|
| 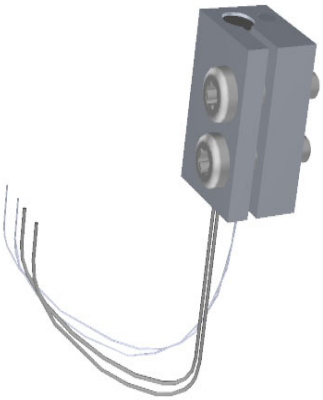 | System: All |
| **Thermo Scientific Part Number** | **1R120404-1330** |

NOTE: There are two lens/source heaters on the ion source, so to replace them, order two of PN 1R120404-1330. To replace the M4 x 20 mm screws on each lens/source heater, order two of PN 1R76913-0420.

| Lens Heater Block | Quantity: Each |
|---|---|
| 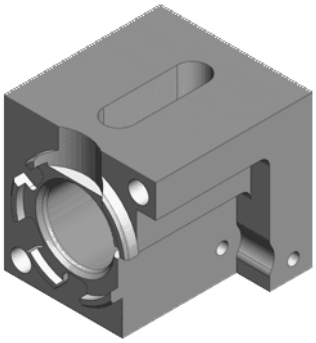 | System: All |
| **Thermo Scientific Part Number** | **1R120404-1321** |

| Lens Heater Block Grounding Strap | Quantity: Each |
|---|---|
| | System: All |
| **Thermo Scientific Part Number** | **1R120404-2010** |

NOTE: To replace all the M3 x 6 mm screws on the grounding strap, order two of PN 1R76913-0305.

| Lens Plate and Springs | Quantity: Each |
|---|---|
| 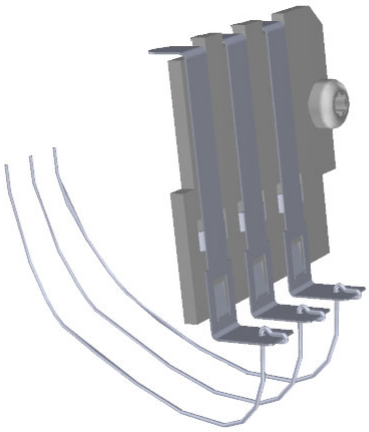 | System: All |
| **Thermo Scientific Part Number** | **1R120404-1750** |

NOTE: To replace the M3 x 6 mm screw on the lens plate and springs, order PN 1R76913-0306. To replace the copper washer, order PN 1R76483-5003.

| Source to Ion Guide Spacer | Quantity: Each |
|---|---|
| | System: All |
| **Thermo Scientific Part Number** | **1R120404-1340** |

# Ion Source Cartridge Components

The ion source cartridge consists of the following components. See the hardware manual for information about installing these components or Table 1 for a comprehensive list of available components.

- EI Ion Source Cartridge (Low Activity)
- Ion Cartridge Sleeve
- EI Ion Volume (Low Activity)
- Ion Volume-Repeller Insulator
- Repeller (Low Activity)
- Ion Volume Locking Ring
- Repeller Spring
- Repeller Nut
- Lens 3/RF Lens
- Lens 1
- Lens 2

| **EI Ion Source Cartridge (Low Activity)** | **Quantity: Each** |
|---|---|
| 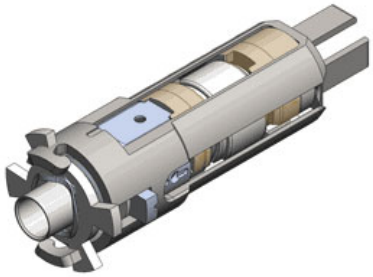 | System: All |
| **Thermo Scientific Part Number** | **1R120404-4100** |

| **Ion Cartridge Sleeve** | **Quantity: Each** |
|---|---|
| 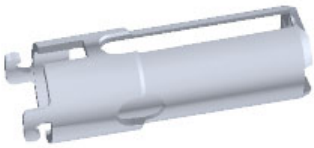 | System: All |
| **Thermo Scientific Part Number** | **1R120404-1105** |

| EI Ion Volume (Low Activity) | Quantity: Each |
|---|---|
| | System: All |
| **Thermo Scientific Part Number** | **1R120404-4111** |

| Ion Volume-Repeller Insulator | Quantity: Each |
|---|---|
| | System: All |
| **Thermo Scientific Part Number** | **1R120404-1114** |

| Repeller (Low Activity) | Quantity: Each |
|---|---|
| | System: All |
| **Thermo Scientific Part Number** | **1R120404-1161** |

| Ion Volume Locking Ring | Quantity: Each |
|---|---|
| | System: All |
| **Thermo Scientific Part Number** | **1R120404-1118** |

| Repeller Spring | Quantity: Pkg of 5 |
|---|---|
| | System: All |
| **Thermo Scientific Part Number** | **1R76485-1000K** |

NOTE: Although the ion source only contains one repeller spring, you will receive a package of five when you order PN 1R76485-1000K.

| Repeller Nut | Quantity: Each |
|---|---|
| | System: All |
| **Thermo Scientific Part Number** | **1R120404-1120** |

| Lens 2 | Quantity: Each |
|---|---|
| | System: All |
| **Thermo Scientific Part Number** | **1R120404-1140** |

| Lens 3/RF Lens | Quantity: Each |
|---|---|
| 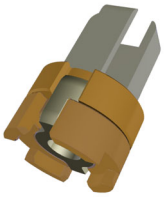 | System: All |
| **Thermo Scientific Part Number** | **1R120574-0103** |

NOTE: This part replaces PN 1R120404-1150.

| Lens 1 | Quantity: Each |
|---|---|
| 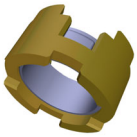 | System: All |
| **Thermo Scientific Part Number** | **1R120574-0139** |

NOTE: This part replaces PN 1R120404-1130.

# Electron Multiplier Components

You can purchase the following electron multiplier components for the ISQ and TSQ GC-MS system. Be sure to include the component's part number when placing an order with your local Sales/Service Representative. See the hardware manual for your instrument for information about installing these components or Table 1 for a comprehensive list of available components.

The following electron multiplier components can be replaced.

- Electron Multiplier (Old)
- Electron Multiplier Plate
- Electron Multiplier, ISQ 7610 and TSQ 9610
- Dynode Feedthrough
- Anode Feedthrough Assembly
- Detector Assembly (Dynode, Electron Multiplier, and Lead Set)

**Table 3.** Replaceable Components of the Electron Multiplier

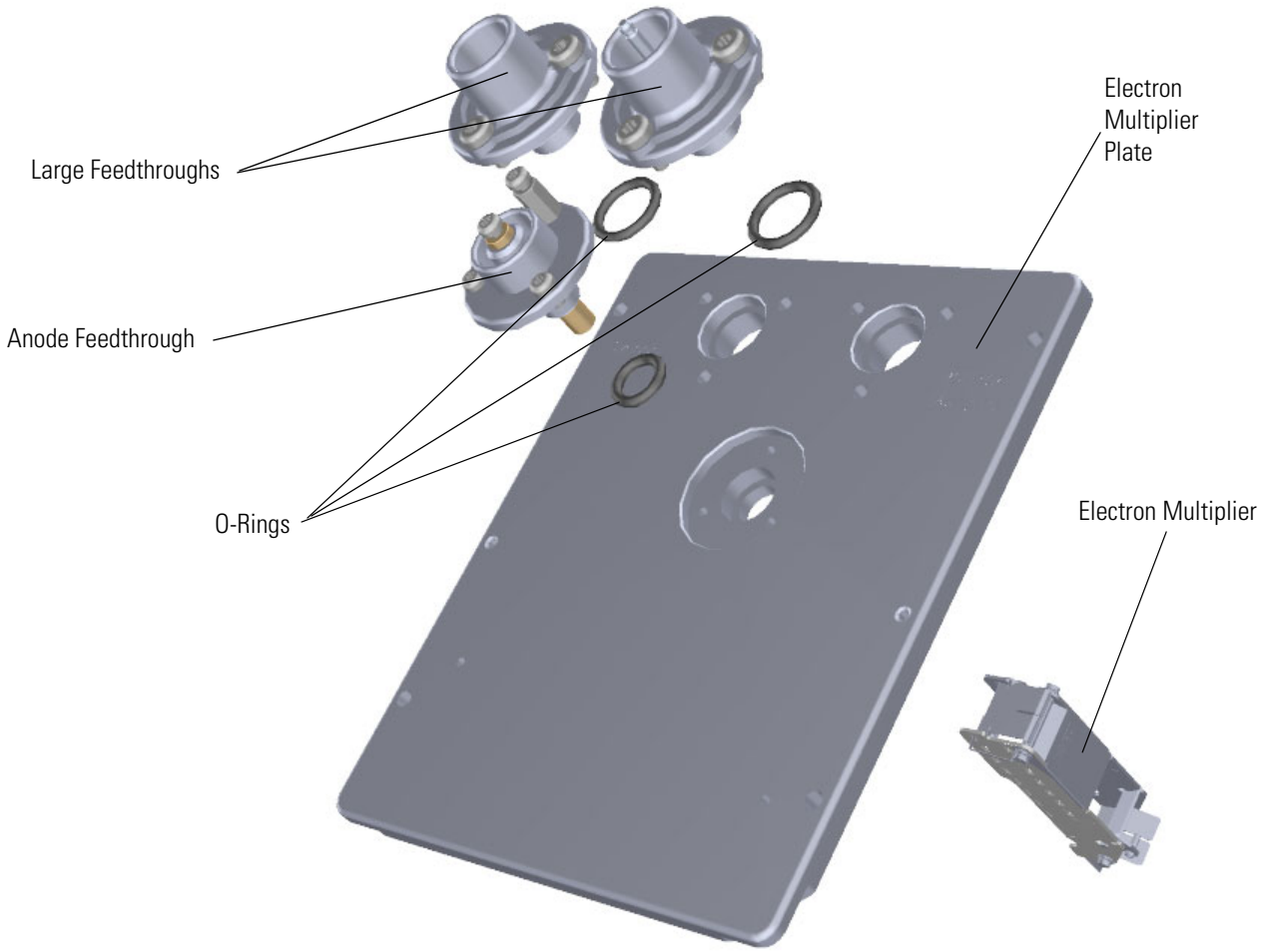

| Electron Multiplier (Old) | Quantity: Each |
|---|---|
| 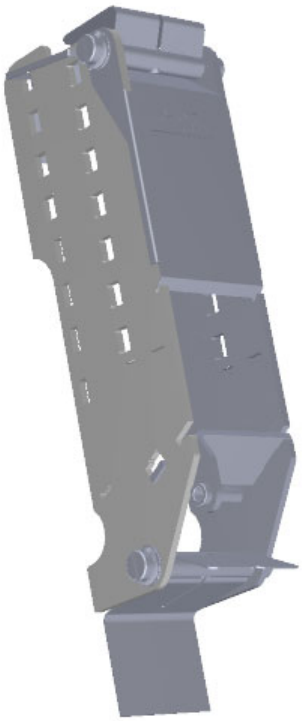 | System: ISQ, ISQ QD, ISQ LT, ISQ 7000, TSQ 8000, TSQ 8000 Evo, TSQ Duo, TSQ 9000 |
| **Thermo Scientific Part Number** | **1R76022-14633** |

| Electron Multiplier Plate | Quantity: Each |
|---|---|
| 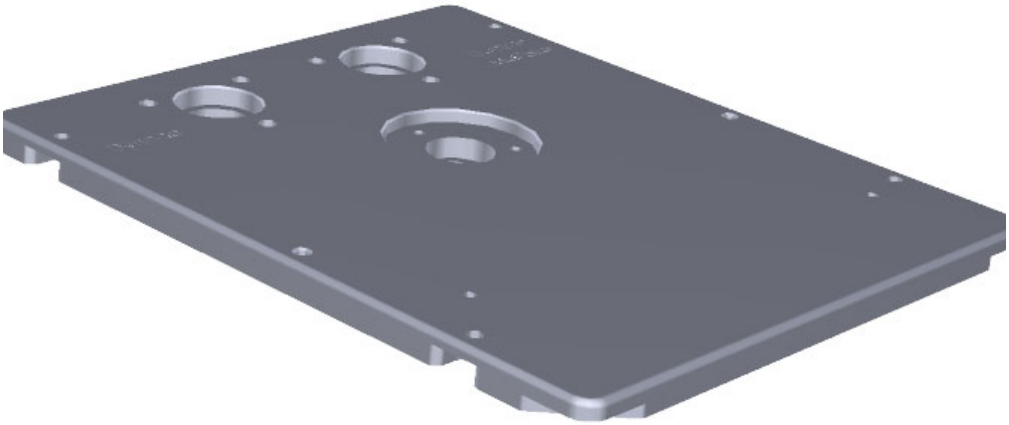 | System: All |
| **Thermo Scientific Part Number** | **1R120405-1000** |

NOTE: To replace the M4 x 10 mm screws, which secure the electron multiplier plate to the manifold, order four of PN 1R76913-0306.

| Electron Multiplier, ISQ 7610 and TSQ 9610 | Quantity: Each |
|---|---|
| 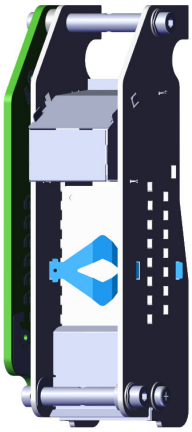 | System: ISQ7610 and TSQ 9610 |
| **Thermo Scientific Part Number** | **1R76022-14634** |

| Dynode Feedthrough | Quantity: Each |
|---|---|
| 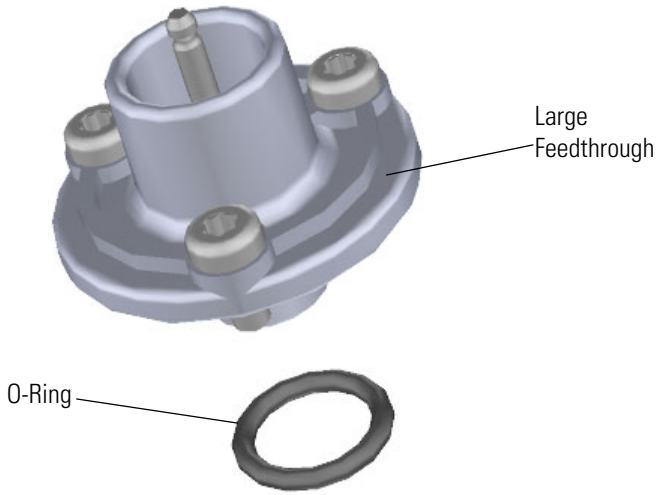  | System: All |
| **Thermo Scientific Part Number** | **1R120610-0040** |

NOTE: There are two large feedthroughs on the ISQ Series instrument, so to replace them, order two of PN 1R120610-0040. To replace all the M4 x 10 mm screws on each large feedthrough, order three of PN 1R76913-0410. To replace the o-ring, order PN 1R3814-113.

| Anode Feedthrough Assembly | Quantity: Each |
|---|---|
| | System: All |

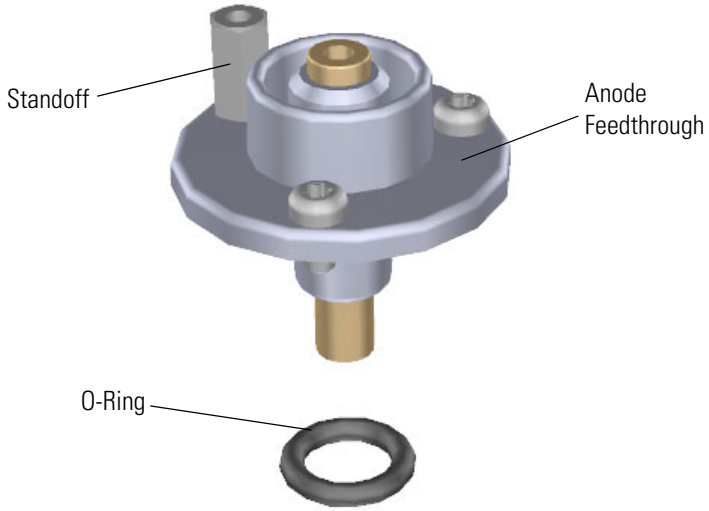


| Thermo Scientific Part Number | 1R120480-0012 |
|---|---|

NOTE: To replace all the M3 x 6 mm screws on the anode feedthrough, order two of PN 1R76913-0306. To replace the o-ring, order PN 1R3814-110. To replace the standoff, order PN 1R77005-3010. To replace the anode feedthrough, order PN 1R120610-0050.

| Detector Assembly (Dynode, Electron Multiplier, and Lead Set) | Quantity: Each |
|---|---|
| | System: All |

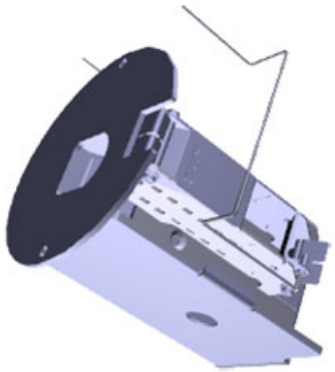

| Thermo Scientific Part Number | 1R120379-0001 |
|---|---|

# Dual Filament Components

You can purchase the following dual filament components for the ISQ and TSQ GC-MS systems. Be sure to include the component's part number when placing an order with your local Sales/Service Representative. See the hardware manual for your instrument for information about installing these components or Table 1 for a comprehensive list of available components.

The following dual filament components can be replaced.

- Dual Filament
- Filament Retaining Spring and Spacer

**Figure 3.** Replaceable Components of the Dual Filament

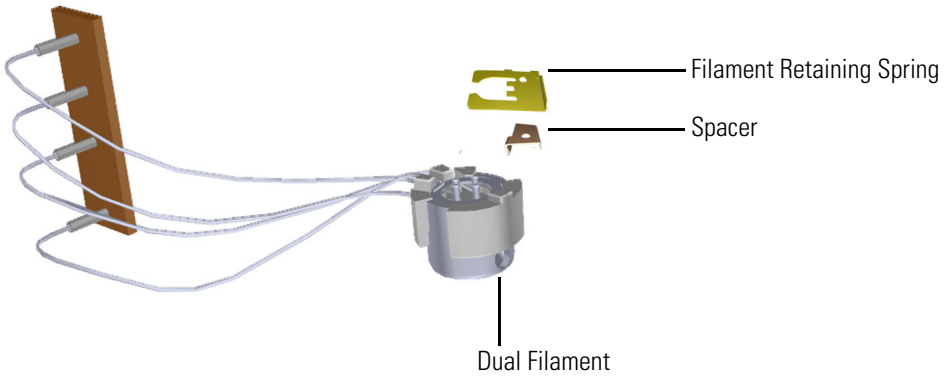

| Dual Filament | Quantity: Each |
|---|---|
| | System: All |

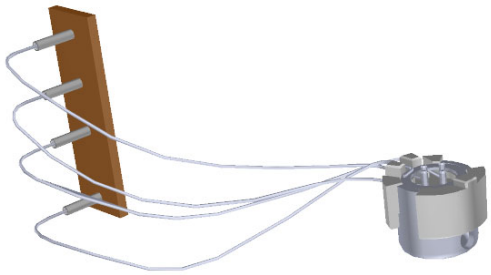

| Thermo Scientific Part Number | 1R120404-1940 |
|---|---|

| Filament Retaining Spring and Spacer | Quantity: Each |
|---|---|
| | System: All |

| Thermo Scientific Part Number | 1R120404-1405 |
|---|---|

NOTE: PN 1R120404-1405 contains the filament retaining spring, spacer, and screw. To replace only the M3 x 6 mm screw on the filament retaining spring, order PN 1R76913-0306.

# Analyzer Components

You can purchase the following analyzer components for the ISQ or TSQ GC-MS instruments. Be sure to include the component's part number when placing an order with your local Sales/Service Representative. See the hardware manual for your instrument for information about installing these components or Table 1 for a comprehensive list of available components.

The following analyzer components can be replaced on the ISQ or TSQ GC-MS instrument.

- ISQ EI Analyzer Tray with Quad Assembled (ISQ Classic, ISQ QD, ISQ LT)
- ISQ Analyzer Tray (Old)
- ISQ 7000 and ISQ 7610 Analyzer Tray Assembled
- ISQ Analyzer Tray (New)
- Ion Guide
- Ion Guide Clamp
- Q1 Assembly with Wires and Tested
- ISQ Exit Endcap
- Entrance Endcap
- Q1 Quad Entrance Lens
- Ion Guide Wire Set
- Collision Cell Assembly
- Q3 Quad Assembly
- Q3 Exit Lens Assembly
- Quad 1 Wire Set
- Quad 3 Wire Set
- TSQ Analyzer Tray with Source Block and Ion Guide (Old)
- TSQ 9610 with NVAEI Analyzer Tray Assembled
- TSQ 9610 with NVAEI Analyzer Tray Assembled
- Wire Routing Clip
- Q1 Exit Lens Wire
- Q3 Entrance Lens Wire
- Q3 Exit Lens Wire

**Figure 4.** Replaceable Components of the ISQ GC-MS Instrument Analyzer

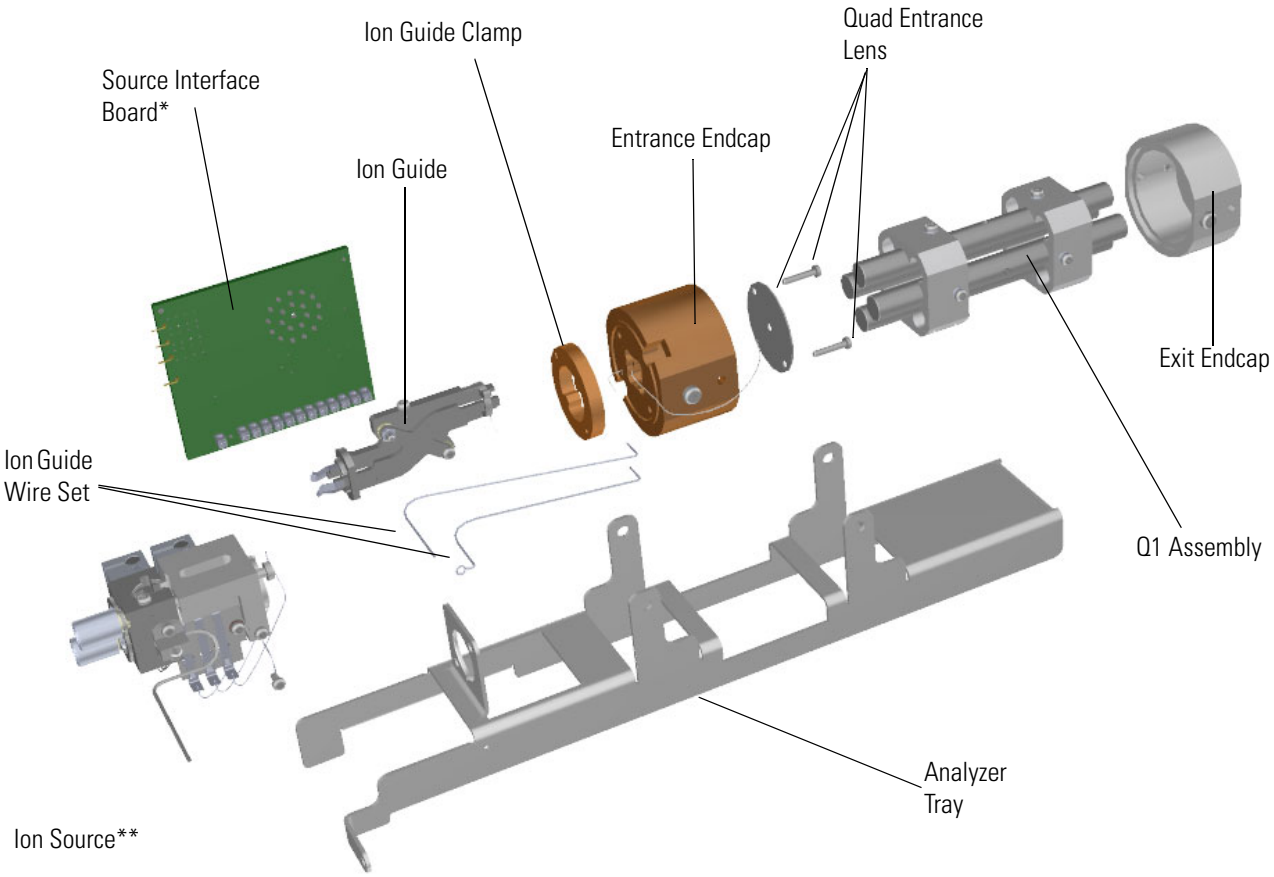


* See Board Components for information about ordering the source interface board.
** See  for information about ordering the ion source.

**Figure 5.** Replaceable Components of the TSQ GC-MS Analyzer

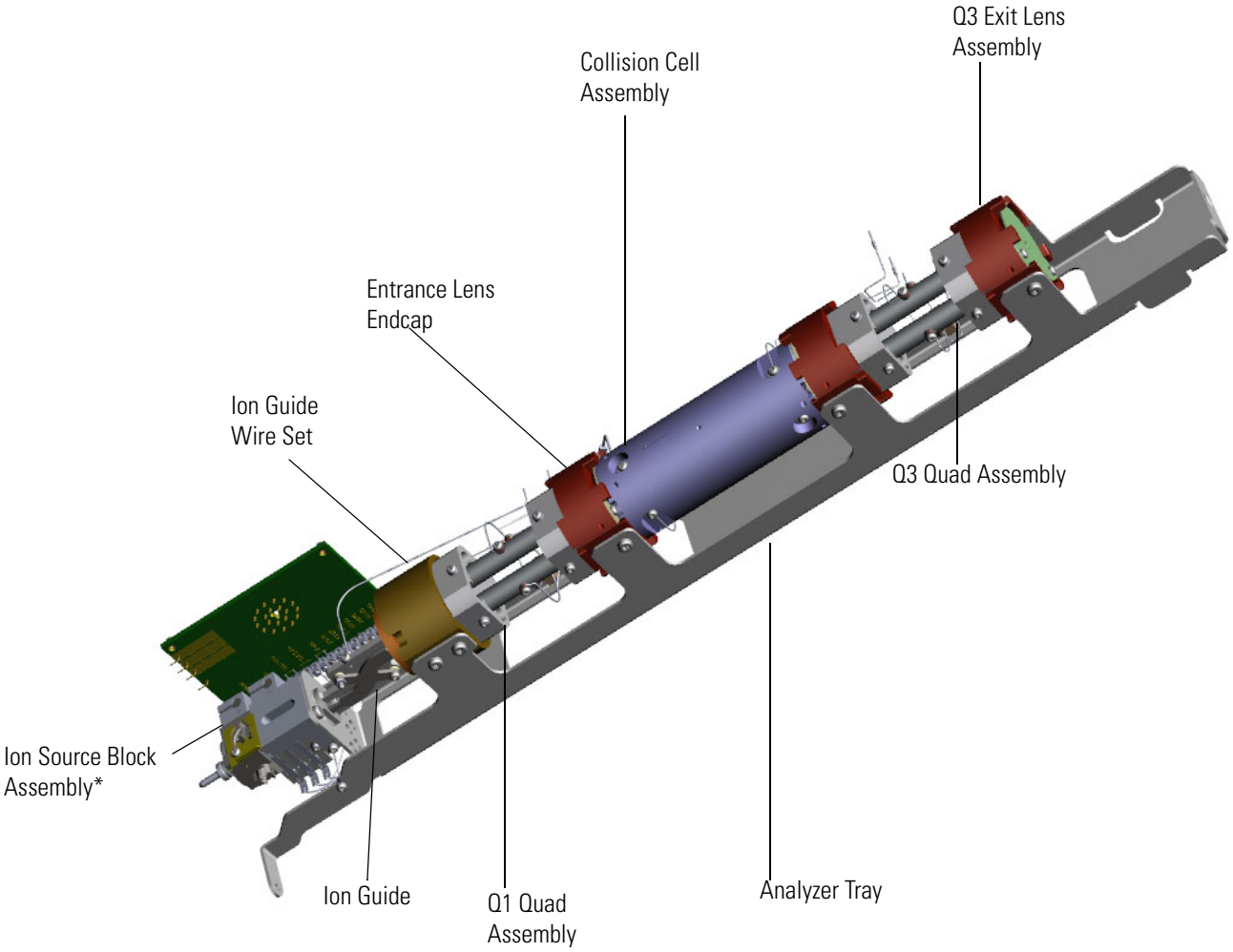


* See Ion Source Components for information about ordering the ion source.

| ISQ EI Analyzer Tray with Quad Assembled (ISQ Classic, ISQ QD, ISQ LT) | Quantity: Each |
|---|---|
| 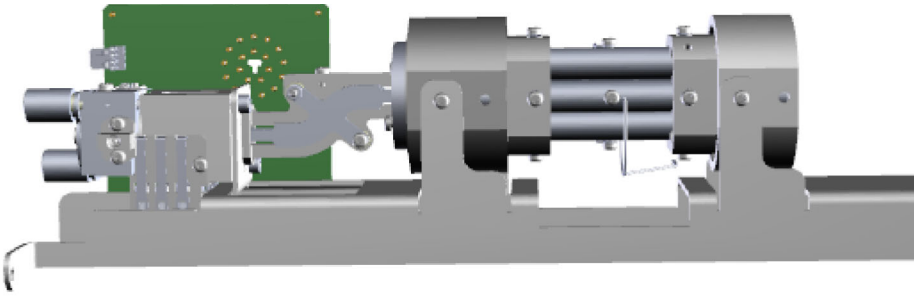 | System: ISQ, ISQ LT, ISQ QD |
| **Thermo Scientific Part Number** | **1R120404-0003** |

| ISQ Analyzer Tray (Old) | Quantity: Each |
|---|---|
| 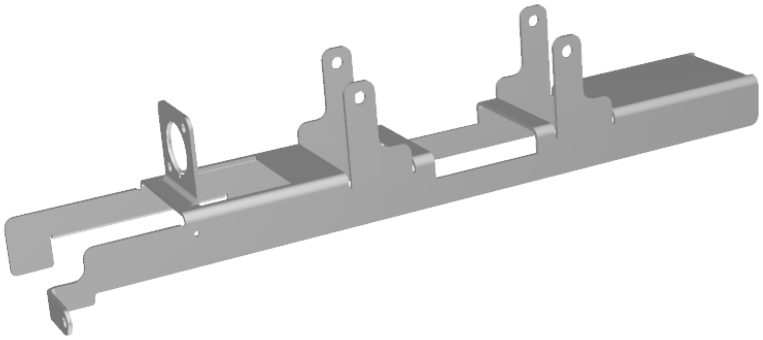 | System: ISQ, ISQ LT, ISQ QD |
| **Thermo Scientific Part Number** | **1R120404-2000** |

| ISQ 7000 and ISQ 7610 Analyzer Tray Assembled | Quantity: Each |
|---|---|
| 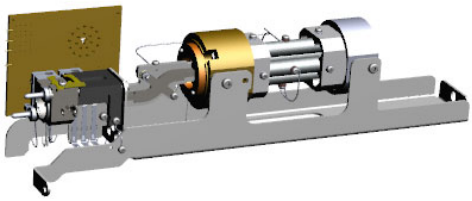 | System: ISQ 7000 and ISQ 7610 |
| **Thermo Scientific Part Number** | **1R120191-0011T** |

| ISQ Analyzer Tray (New) | Quantity: Each |
|---|---|
| | System: All ISQ systems |

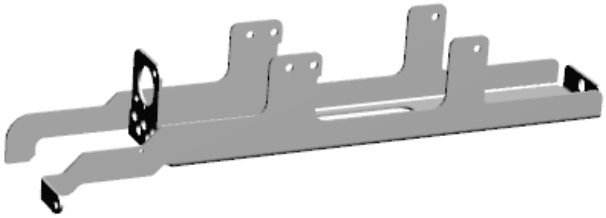

| Thermo Scientific Part Number | 1R120404-2000 |
|---|---|

| Ion Guide | Quantity: Each |
|---|---|
| | System: All |

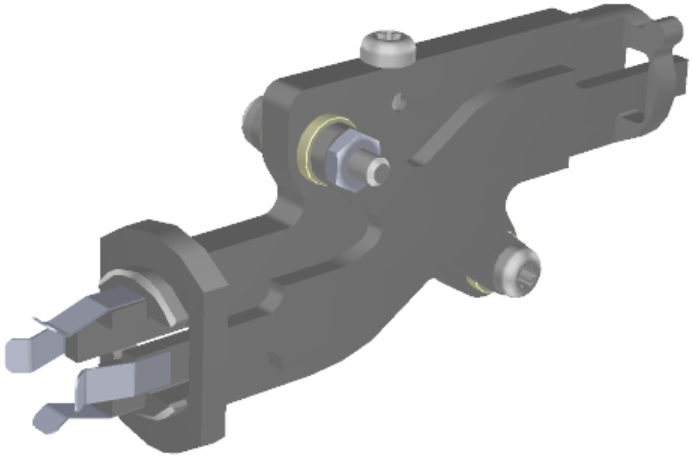

| Thermo Scientific Part Number | 1R120404-3100 |
|---|---|

| Ion Guide Clamp | Quantity: Each |
|---|---|
| | System: All |
| **Thermo Scientific Part Number** | **1R120404-3214** |

NOTE: To replace all the M3 x 16 mm screws on the ion guide clamp, order two of PN 1R76913-0316.

| Q1 Assembly with Wires and Tested | Quantity: Each |
|---|---|
| 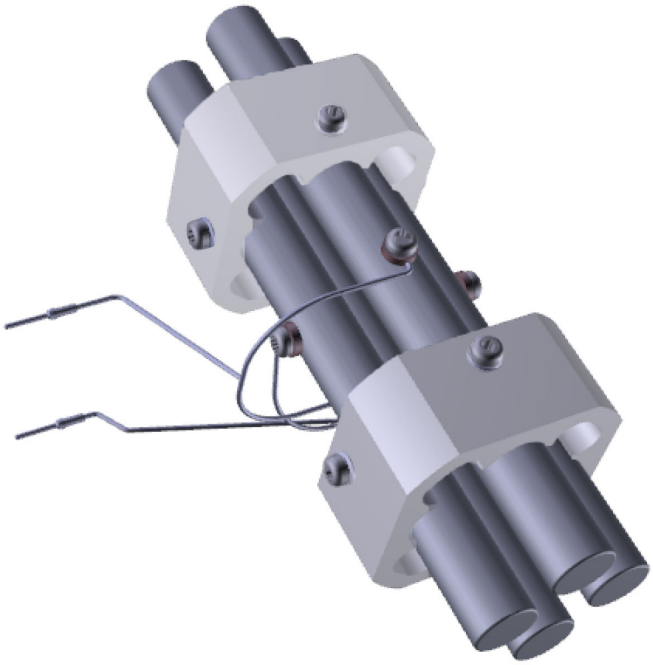 | System: All |
| **Thermo Scientific Part Number** | **1R120542-2560** |

| ISQ Exit Endcap | Quantity: Each |
|---|---|
| 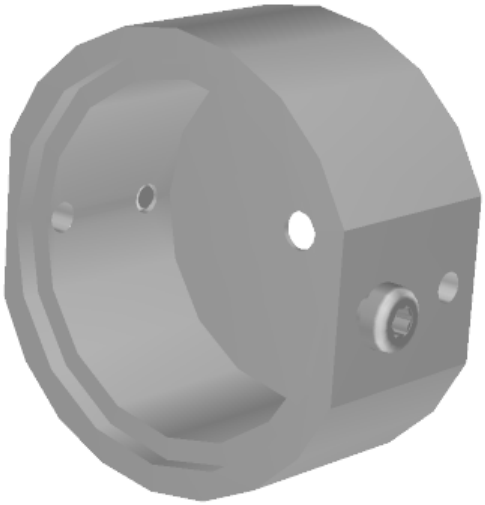 | System: ISQ All |
| **Thermo Scientific Part Number** | **1R120404-3230** |

NOTE: To replace all the M4 x 6 mm screws on the exit endcap, order two of PN 1R76913-0406.

| Entrance Endcap | Quantity: Each |
|---|---|
| 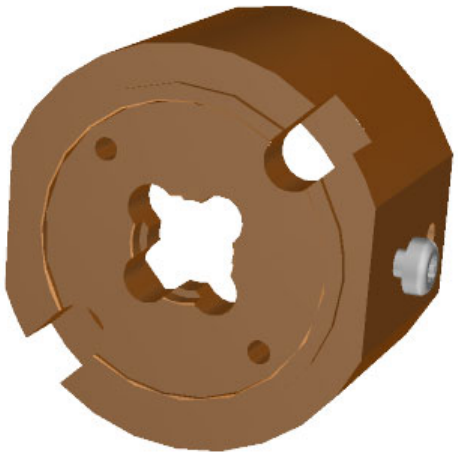 | System: All |
| **Thermo Scientific Part Number** | **1R120404-3211** |

NOTE: To replace all the M4 x 6 mm screws on the entrance endcap, order two of PN 1R76913-0406.

| Q1 Quad Entrance Lens | Quantity: Each |
|---|---|
| | System: All |

| Thermo Scientific Part Number | 1R120404-3212 |
|---|---|

NOTE: To replace all the M3 x 16 mm screws on the quad entrance lens, order two of PN 1R76913-0316.

| Ion Guide Wire Set | Quantity: Pkg of 2 |
|---|---|
| | System: All |

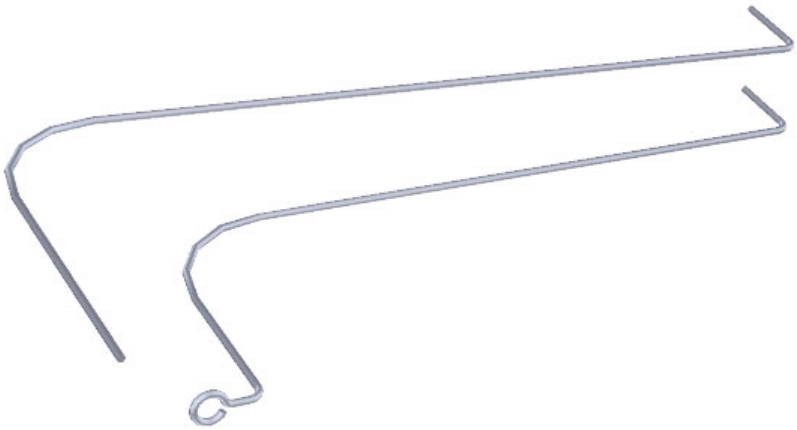

| Thermo Scientific Part Number | 1R120480-0004 |
|---|---|

NOTE: To replace the M3 nut on the ion guide wire set, order PN 1R76904-0003.

| Collision Cell Assembly | Quantity: Each |
|---|---|
| 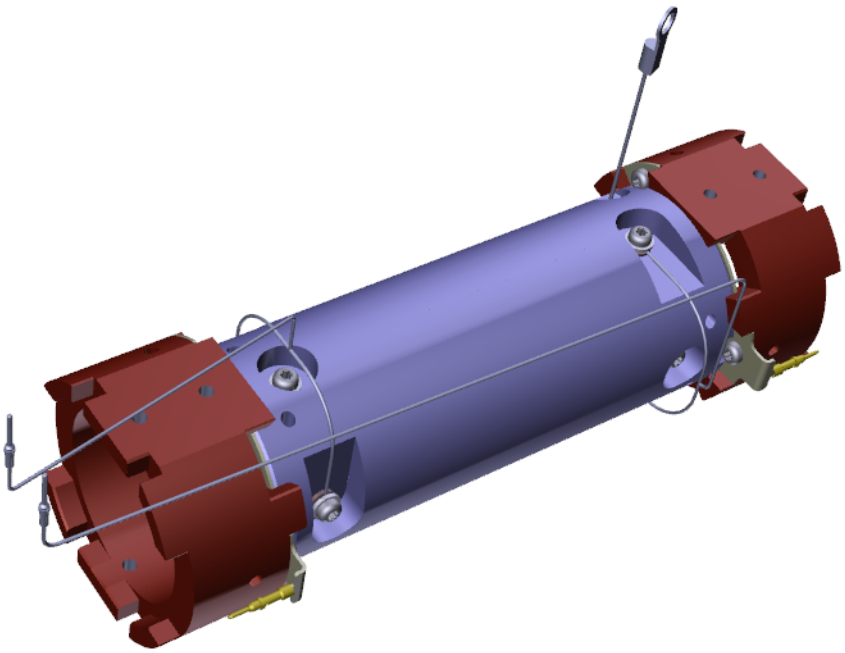 | System: TSQ All |
| **Thermo Scientific Part Number** | **1R120574-0161** |

NOTE: To replace all the M4 x 6 mm screws to mount the collision cell to the analyzer tray, order four of PN 1R76913-0306.

| Q3 Quad Assembly | Quantity: Each |
|---|---|
| | System: TSQ All |
| **Thermo Scientific Part Number** | **1R120542-2570** |

| Q3 Exit Lens Assembly | Quantity: Each |
|---|---|
| 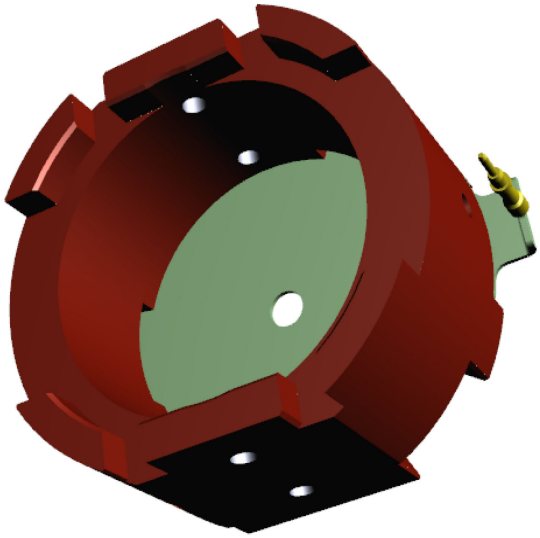 | System: TSQ All |
| **Thermo Scientific Part Number** | **1R120542-2536** |

NOTE: To replace all the M4 x 6 mm screws on the Q3 exit lens assembly to mount it to the tray, order two of PN 1R76913-0406.

| Quad 1 Wire Set | Quantity: Pkg of 2 |
|---|---|
| 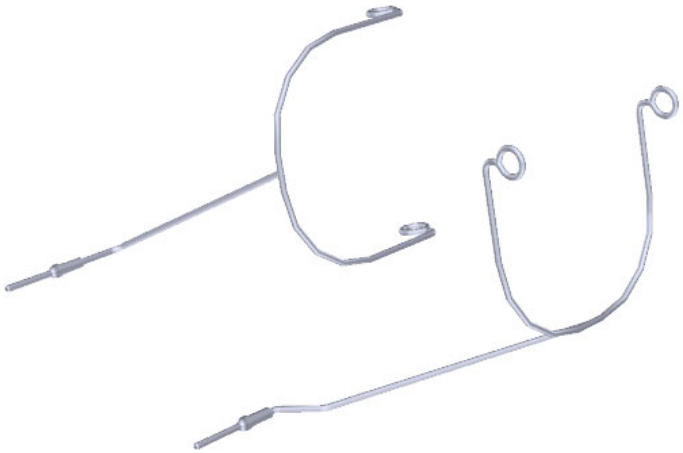 | System: All |
| **Thermo Scientific Part Number** | **1R120480-0005** |

NOTE: To replace all the M3 x 5 mm screws on the quad wire set, order four of PN 1R76913-0305. To replace all the copper washers, order eight of PN 1R76483-5003.

## Quad 3 Wire Set

**Quantity: Pkg of 2**

System: TSQ All

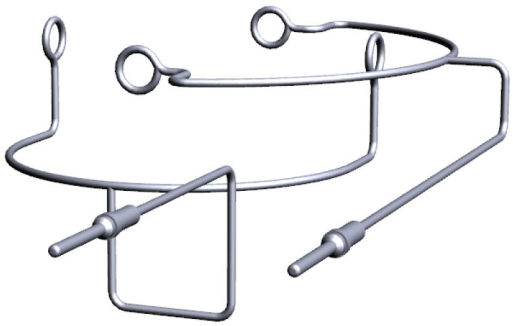

| Thermo Scientific Part Number | 1R120480-0006 |
|---|---|

NOTE: To replace all the M3 x 5 mm screws on the quad wire set, order four of PN 1R76913-0305. To replace all the copper washers, order eight of PN 1R76483-5003.

## TSQ Analyzer Tray with Source Block and Ion Guide (Old)

**Quantity: Each**

Systems: TSQ 8000,
TSQ 8000 Evo, TSQ Duo

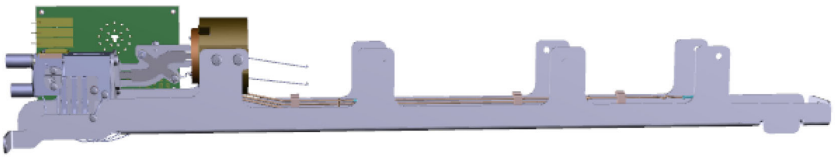

| Thermo Scientific Part Number | 1R120542-2535 |
|---|---|

| TSQ 9000 Analyzer Tray Assembled | Quantity: Each |
|---|---|
| | System: TSQ 9000 |

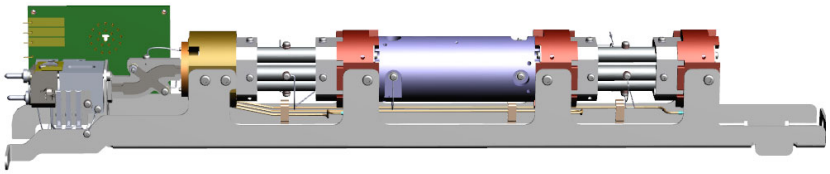

| Thermo Scientific Part Number | 1R120192-0011T |
|---|---|

| Wire Routing Clip | Quantity: Each |
|---|---|
| | System: TSQ All |

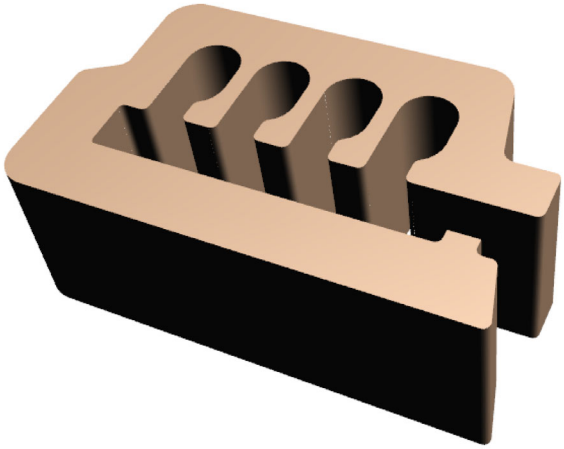

| Thermo Scientific Part Number | 1R120542-2511 |
|---|---|

| TSQ 9610 with NVAEI Analyzer Tray Assembled | Quantity: Each |
|---|---|
| | Systems: TSQ 9610 with NVAEI |

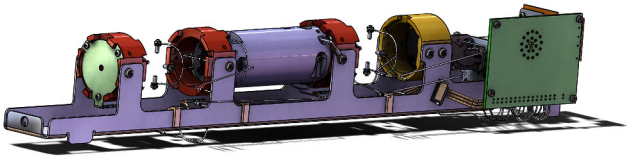

| Thermo Scientific Part Number | 1R120189-0011T |
|---|---|

| Q1 Exit Lens Wire | Quantity: Each |
|---|---|
| | System: TSQ All |

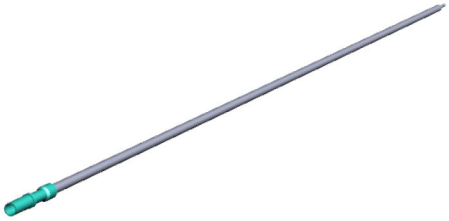

| Thermo Scientific Part Number | 1R120542-2515 |
|---|---|

| Q3 Entrance Lens Wire | Quantity: Each |
|---|---|
| | System: TSQ All |

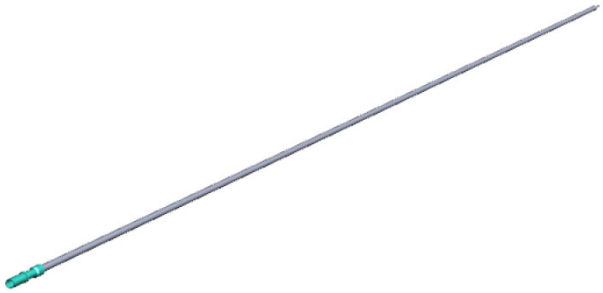

| Thermo Scientific Part Number | 1R120542-2514 |
|---|---|

| Q3 Exit Lens Wire | Quantity: Each |
|---|---|
| | System: TSQ All |

| Thermo Scientific Part Number | 1R120542-2513 |
|---|---|

# Board Components

You can purchase the following board components for the ISQ or TSQ GC-MS system. Be sure to include the component's part number when placing an order with your local Sales/Service Representative. See the hardware manual for your instrument for information about installing these components or Table 1 for a comprehensive list of available components.

The following board components can be replaced.

- Q1 RF Board
- Q3 RF Board
- Q1/Rod Driver Board
- ISQ Lens Driver Board
- Q3 Rod Driver Board (75V)
- Q3 Rod Driver Board (75V)
- TSQ Lens Driver Board (Old)
- TSQ 9000 and TSQ 9610 Lens Driver Board
- Source Interface Board, ISQ Systems
- Source Interface Board, TSQ Systems
- Heat Shield for the AEI Source Interface Board
- Heat Shield for the Source Interface Board
- Electrometer Board
- Electrometer Shield
- Controller Interface Board
- Controller Interface Board Support Bracket
- PC Communication Board
- ISQ Distribution Board
- TSQ Distribution Board
- 20-Pin Feedthrough
- 4-Pin Feedthrough

**Figure 6.** Replaceable Board Components of the ISQ GC-MS System

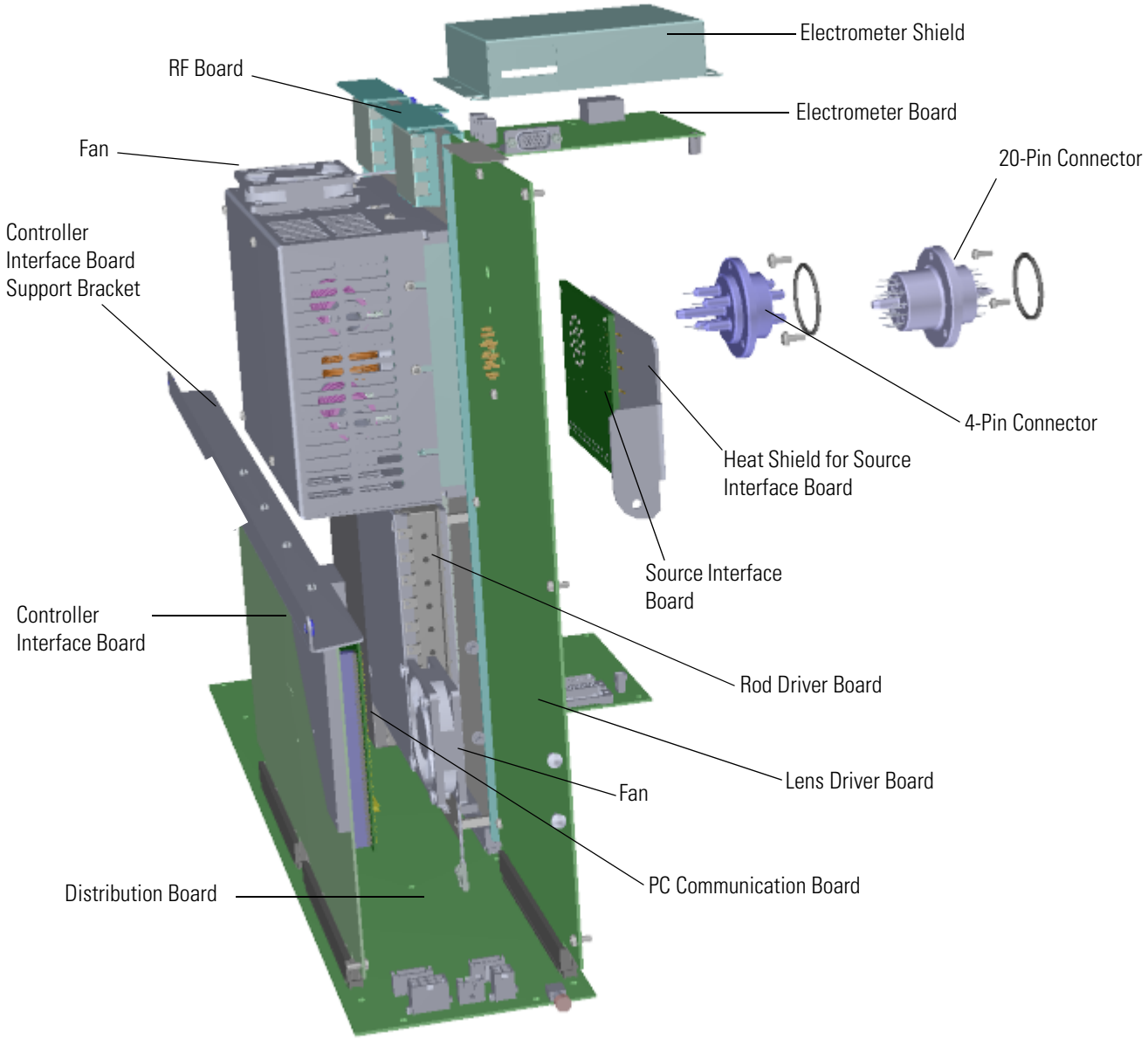


**WARNING ELECTRICAL SHOCK HAZARD:** For safety reasons, the fuses on the lens driver board can only be replaced by Field Service Engineers.

**Figure 7.** Replaceable Board Components of TSQ GC-MS Systems

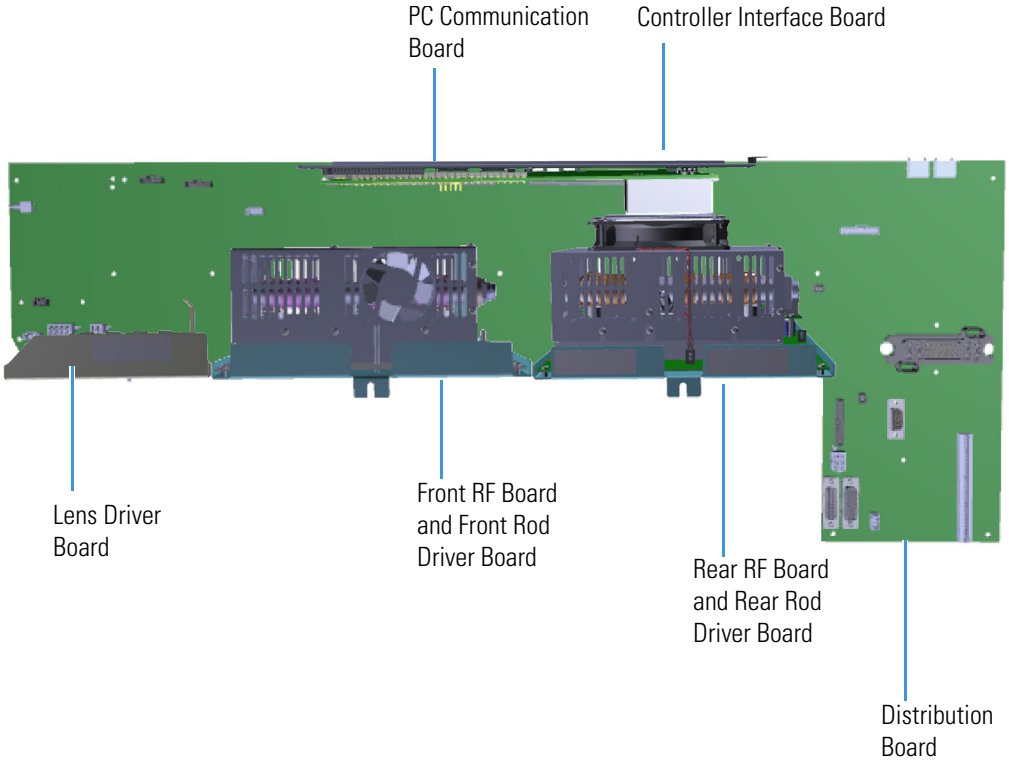


**WARNING ELECTRICAL SHOCK HAZARD:** For safety reasons, the fuses on the lens driver board can only be replaced by Field Service Engineers.

| Q1 RF Board | Quantity: Each |
|---|---|
| | System: All |

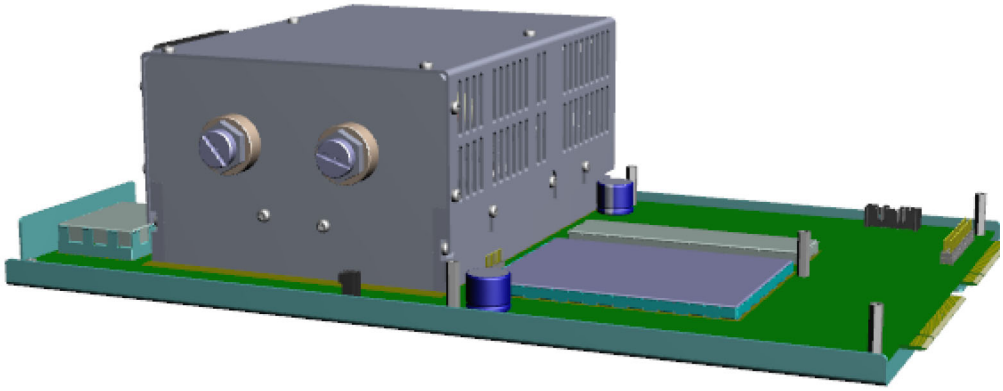

| Thermo Scientific Part Number | 1R120485-A060 |
|---|---|

NOTE: To replace the 60 mm fan on the RF board, order PN 1R120443-0002.

| Q3 RF Board | Quantity: Each |
|---|---|
| | System: TSQ All |

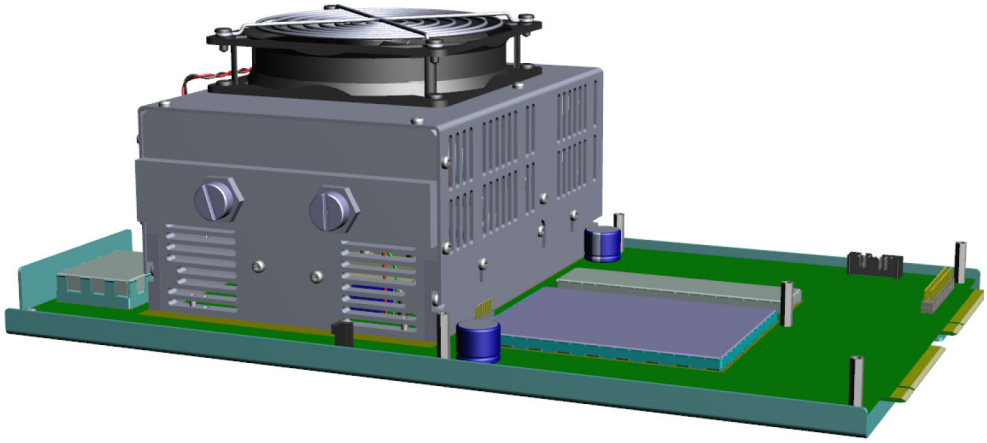

| Thermo Scientific Part Number | 1R120485-A065 |
|---|---|

| Q1/Rod Driver Board | Quantity: Each |
|---|---|
| | System: All |
| **Thermo Scientific Part Number** | **1R120485-0415** |

NOTE: If you only need to replace the fan, order PN 1R120443-0011.

| ISQ Lens Driver Board | Quantity: Each |
|---|---|
| 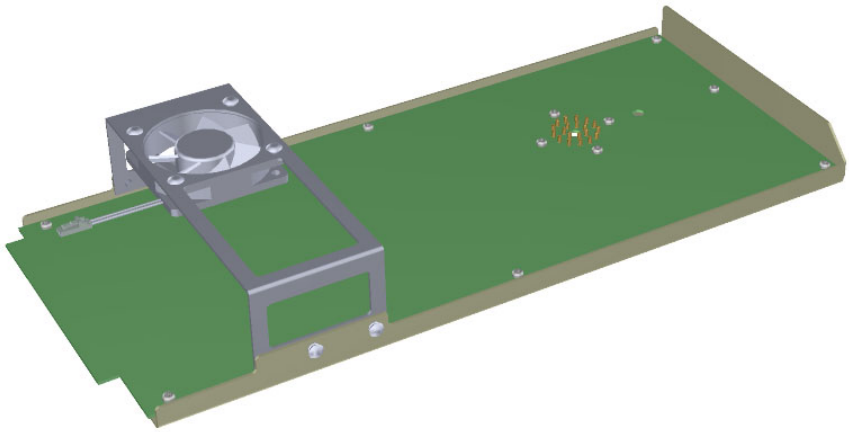 | System: ISQ All |
| **Thermo Scientific Part Number** | **1R120354-A110** |

NOTE: If you only need to replace the fan, order PN 1R120443-0002

| Q3 Rod Driver Board (75V) | Quantity: Each |
|---|---|
| | System: TSQ All |

| Thermo Scientific Part Number | 1R120485-0420 |
|---|---|

| TSQ Lens Driver Board (Old) | Quantity: Each |
|---|---|
| | System: TSQ 8000, TSQ 8000 Evo, TSQ Duo |

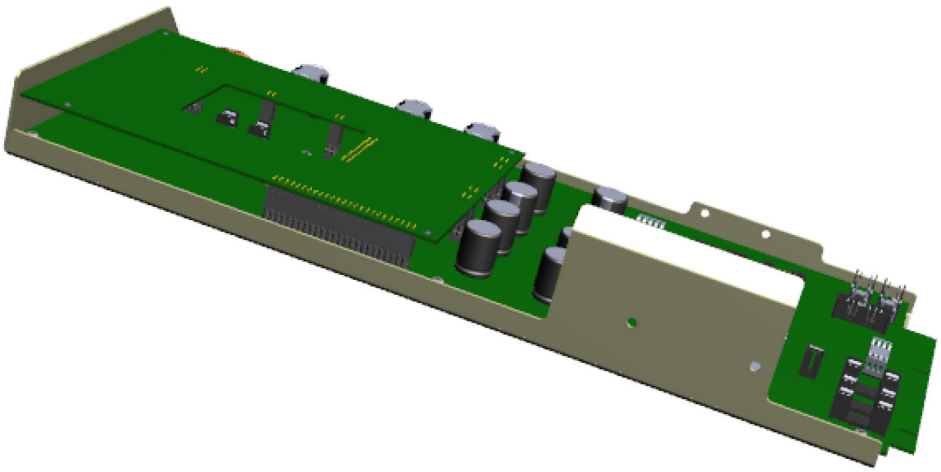

| Thermo Scientific Part Number | 1R120485-A110 |
|---|---|

| TSQ 9000 and TSQ 9610 Lens Driver Board | Quantity: Each |
|---|---|
| 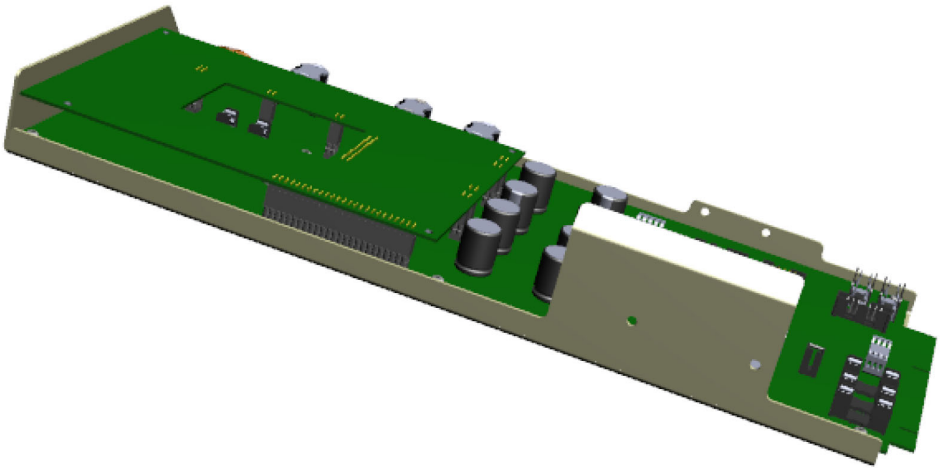 | System: TSQ 9000 and TSQ 9610 |
| **Thermo Scientific Part Number** | **1R120485-A114T** |

| Source Interface Board, ISQ Systems | Quantity: Each |
|---|---|
| 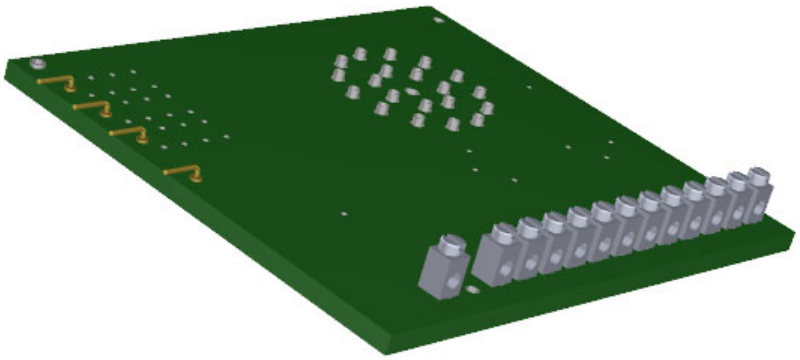 | System: ISQ all |
| **Thermo Scientific Part Number** | **1R120354-0210** |

| Source Interface Board, TSQ Systems | Quantity: Each |
|---|---|
| 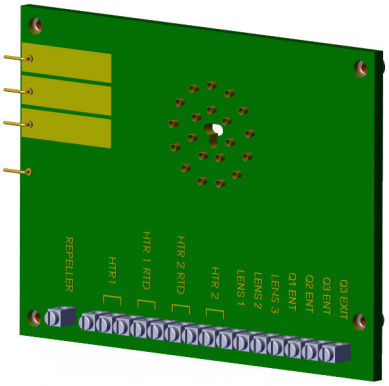  | System: TSQ All |
| **Thermo Scientific Part Number** | **1R120485-0210** |

| Heat Shield for the AEI Source Interface Board | Quantity: Each |
|---|---|
| 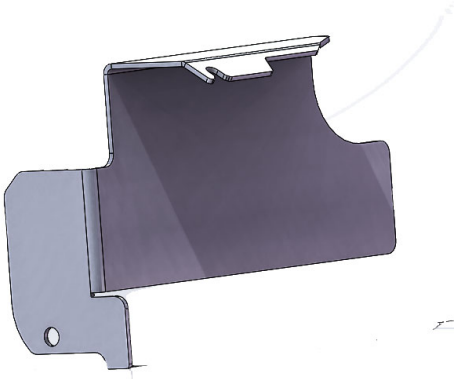 | System: TSQ 9610 with NVAEI |
| **Thermo Scientific Part Number** | **1R120189-2111** |

| Heat Shield for the Source Interface Board | Quantity: Each |
|---|---|
| 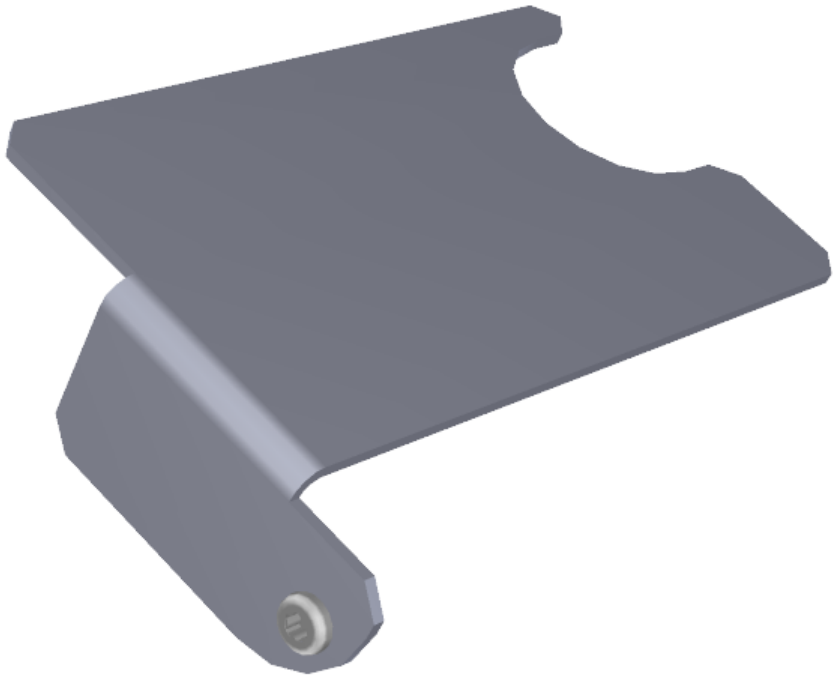 | System: All except TSQ 9610 with AEI |
| **Thermo Scientific Part Number** | **1R120404-2110** |

NOTE: To replace the M4 x 10 mm screw on the heat shield, order PN 1R76913-0410.

| Electrometer Board | Quantity: Each |
|---|---|
| 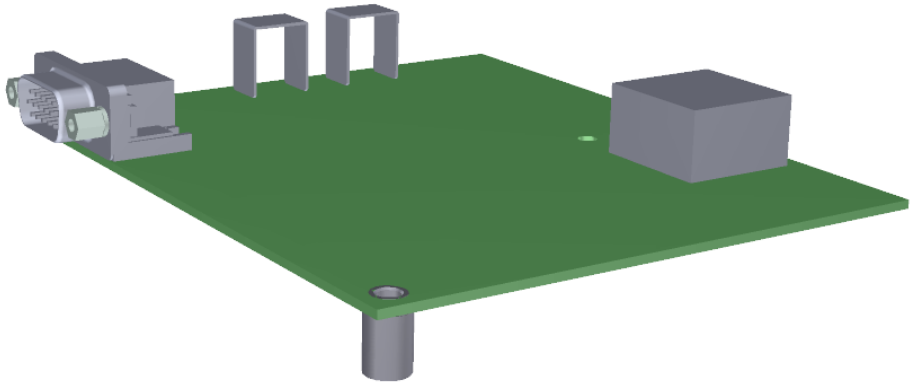 | System: All |
| **Thermo Scientific Part Number** | **1R120354-0500** |

NOTE: To replace all the M3 x 6 mm screws on the electrometer board, order two of PN 1R76913-0306. To replace all the M3 x 16 mm screws, order two of PN 1R76913-0316.

| Electrometer Shield | Quantity: Each |
|---|---|
| 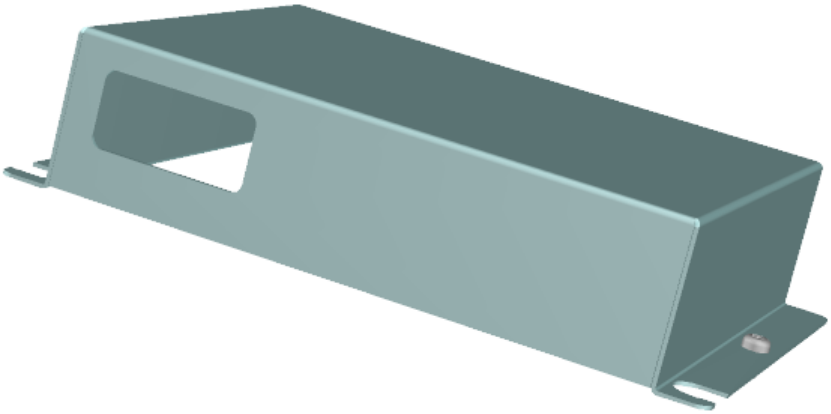 | System: All |
| **Thermo Scientific Part Number** | **1R120368-0010** |

NOTE: To replace all the M3 x 6 mm screws on the electrometer shield, order two of PN 1R76913-0306.

| Controller Interface Board | Quantity: Each |
|---|---|
| 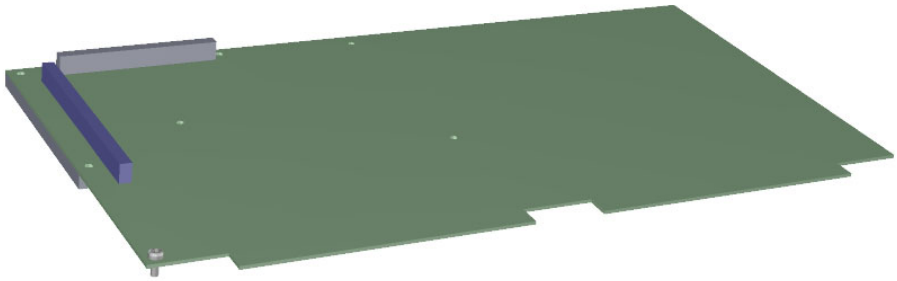 | System: All |
| **Thermo Scientific Part Number** | **1R120485-0020** |

| Controller Interface Board Support Bracket | Quantity: Each |
|---|---|
| | System: All |
| **Thermo Scientific Part Number** | **1R120373-0002** |

| PC Communication Board | Quantity: Each |
|---|---|
| 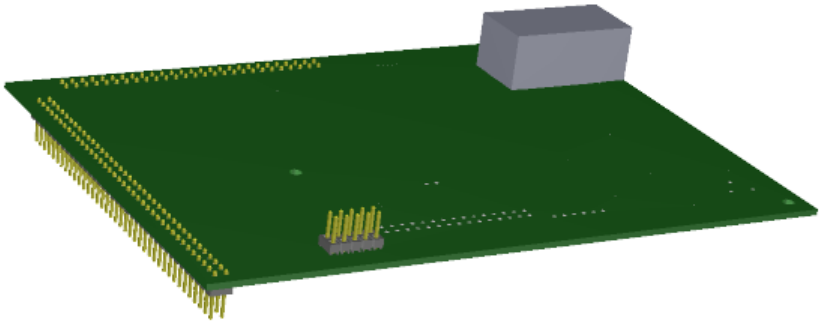 | System: All |
| **Thermo Scientific Part Number** | **1R120595-0010** |

| ISQ Distribution Board | Quantity: Each |
|---|---|
| 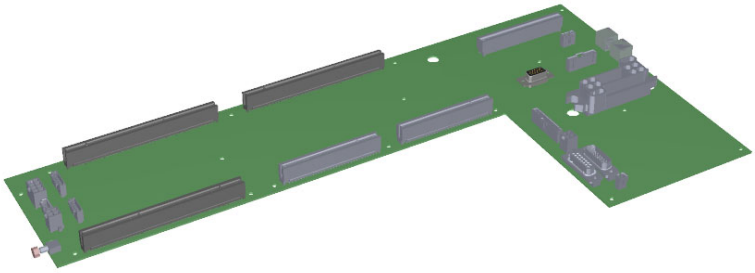 | System: ISQ All |
| **Thermo Scientific Part Number** | **1R120369-0001** |

NOTE: To replace all the M3 x 10 mm screws on the distribution board, order nineteen of PN 1R76913-0310.

## TSQ Distribution Board

**Quantity: Each**

System: TSQ All

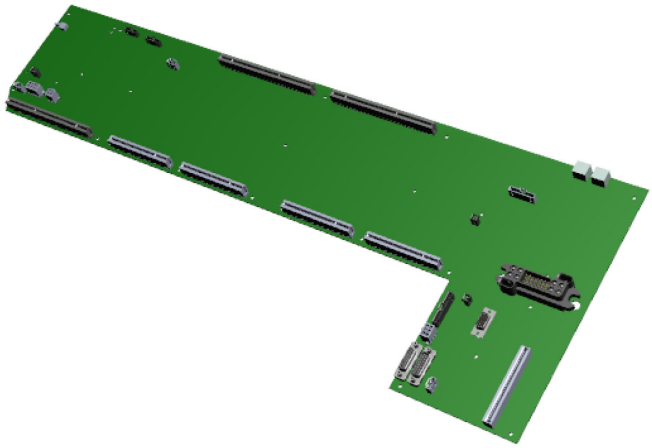

| Thermo Scientific Part Number | 1R120485-0810 |
|---|---|

NOTE: To replace all the M3 x 10 mm screws on the distribution board, order 26 of PN 1R76913-0310.

## 20-Pin Feedthrough

**Quantity: Each**

System: All

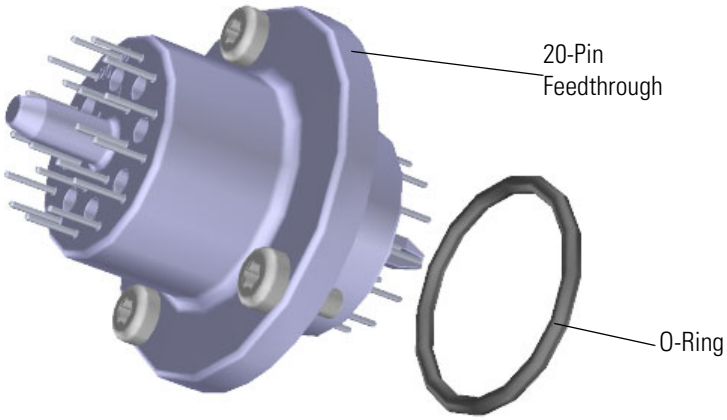


| Thermo Scientific Part Number | 1R120610-0020 |
|---|---|

NOTE: To replace all the M4 x 10 mm screws on the 20-pin feedthrough, order three of PN 1R76913-0410. To replace the o-ring, order PN 1R3814-123.

| 4-Pin Feedthrough | Quantity: Each |
|---|---|
| | System: All |

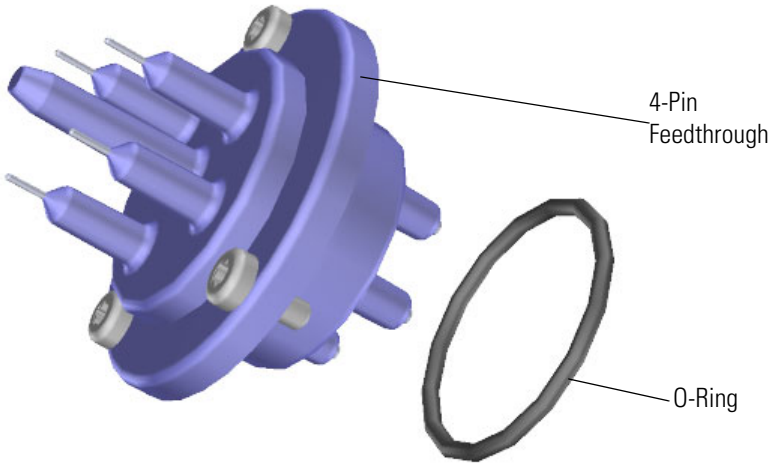


| Thermo Scientific Part Number | 1R120610-0030 |
|---|---|

NOTE: To replace all the M4 x 10 mm screws on the 4-pin feedthrough, order three of PN 1R76913-0410. To replace the o-ring, order PN 1R3814-127.

# Power Supply Components

You can purchase the following power supply components for the ISQ and TSQ GC-MS systems. Be sure to include the component's part number when placing an order with your local Sales/Service Representative. See the hardware manual for your instrument for information about installing these components or Table 1 for a comprehensive list of available components.

The following power supply components can be replaced.

- ISQ Power Supply System
- TSQ Power Supply System
- Dynode and Multiplier Power Supply and Cables (EI only)

**Figure 8.** Replaceable Power Supply Components of the ISQ GC-MS

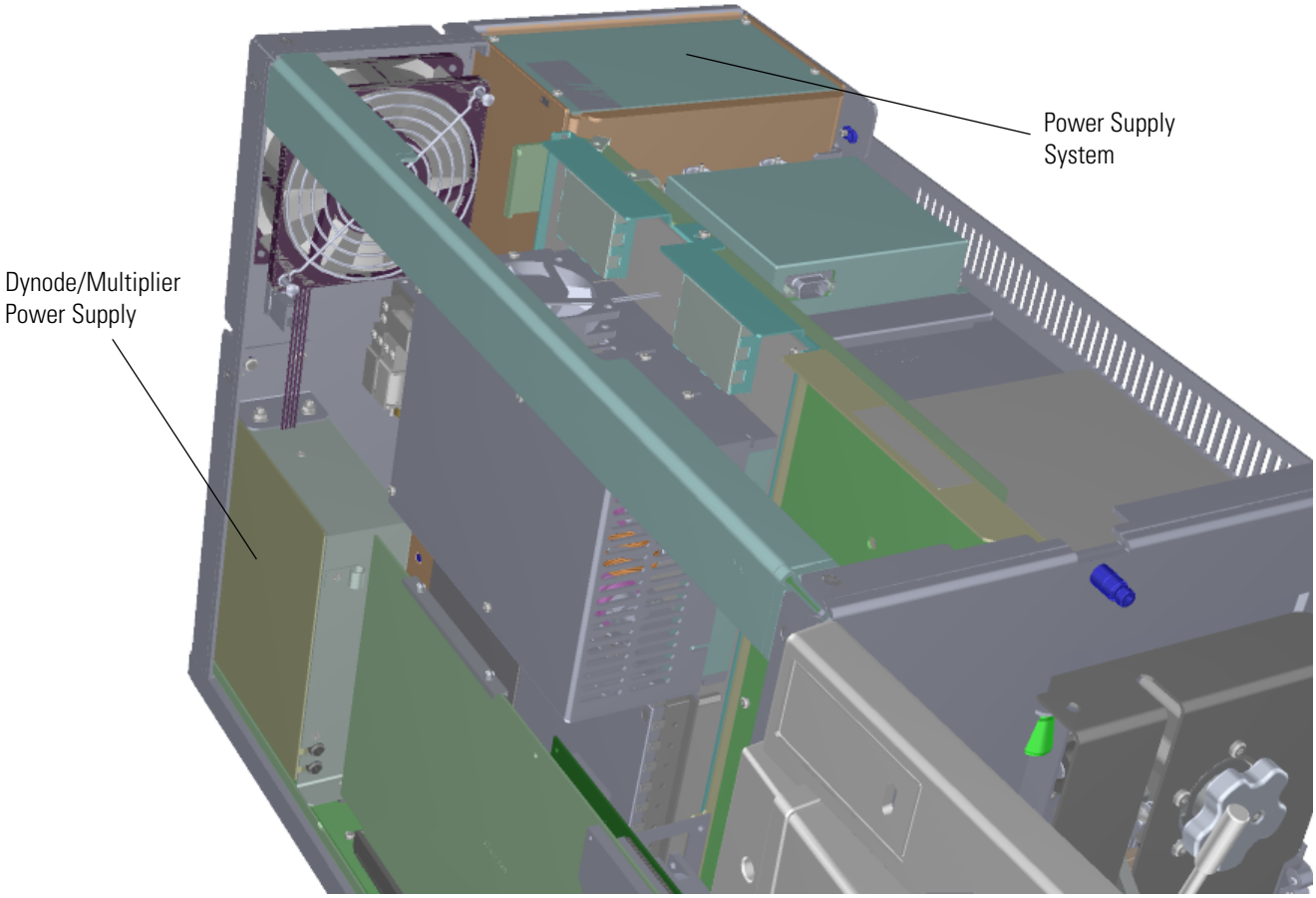

**Figure 9.** Replaceable Power Supply Components of the TSQ GC-MS

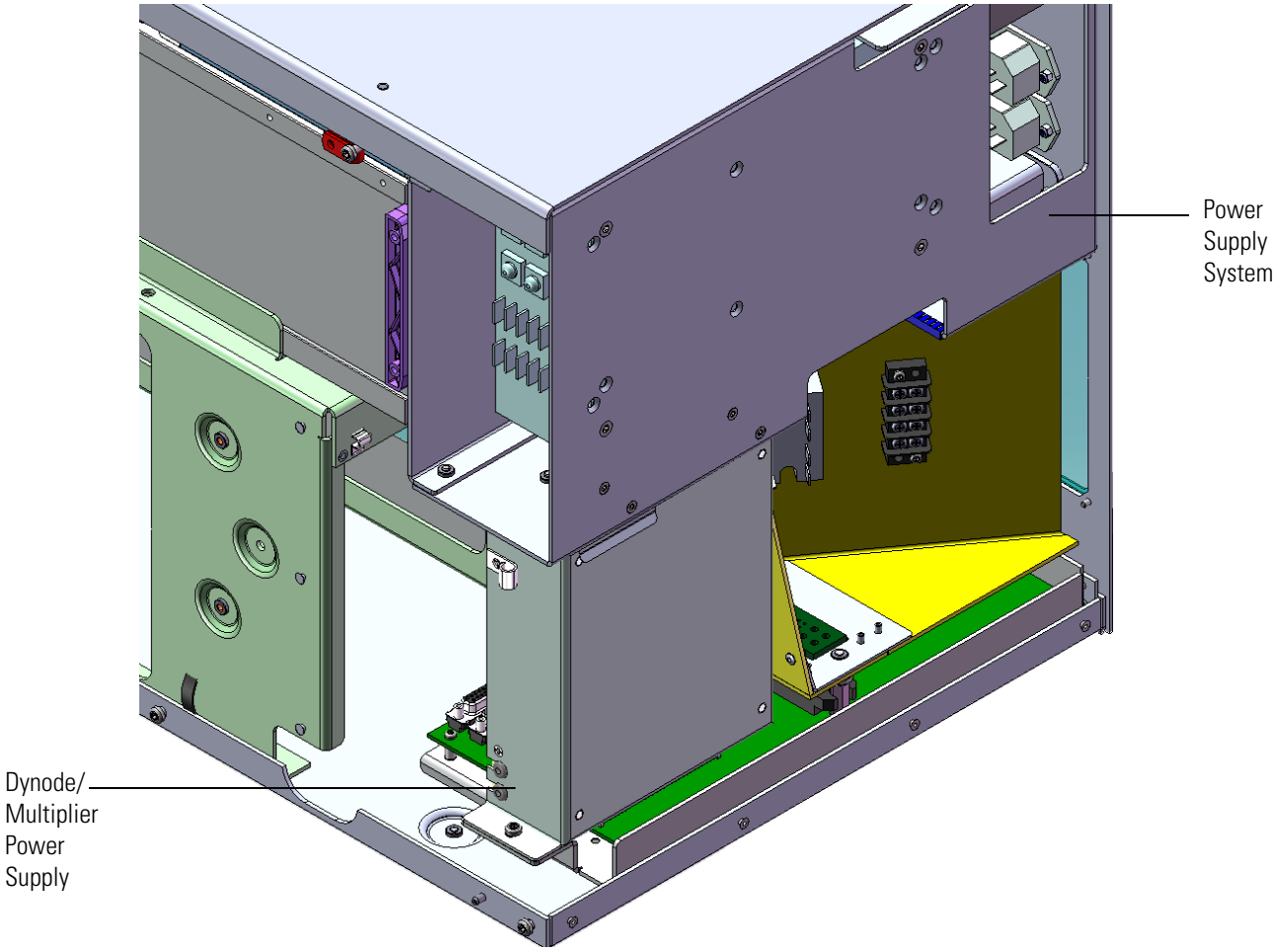

| ISQ Power Supply System | Quantity: Each |
|---|---|
| | Systems: ISQ All |

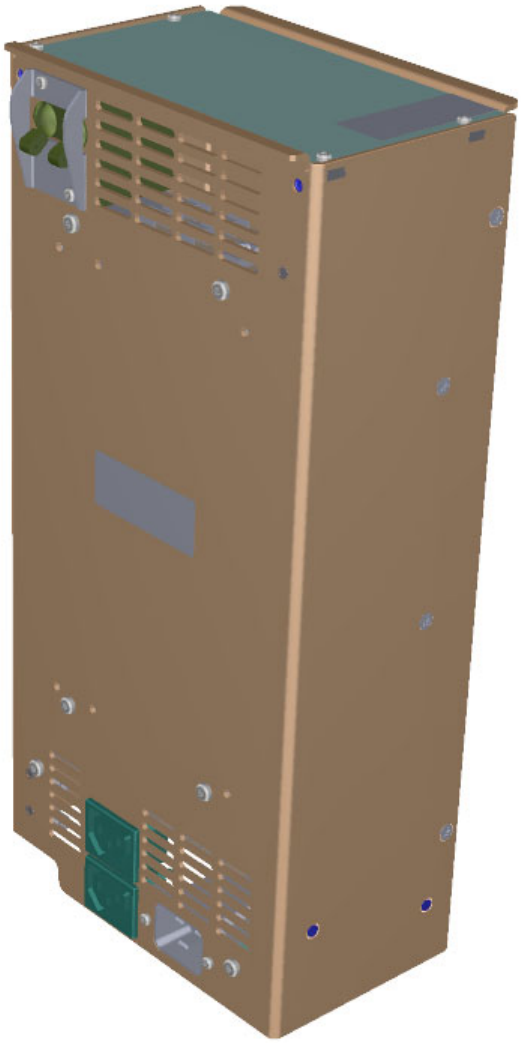

| Thermo Scientific Part Number | 1R120380-0001 |
|---|---|

NOTE: To replace all the M4 x 8 mm screws on the power supply, order two of PN 1R76937-0408.

| TSQ Power Supply System | Quantity: Each |
|---|---|
| 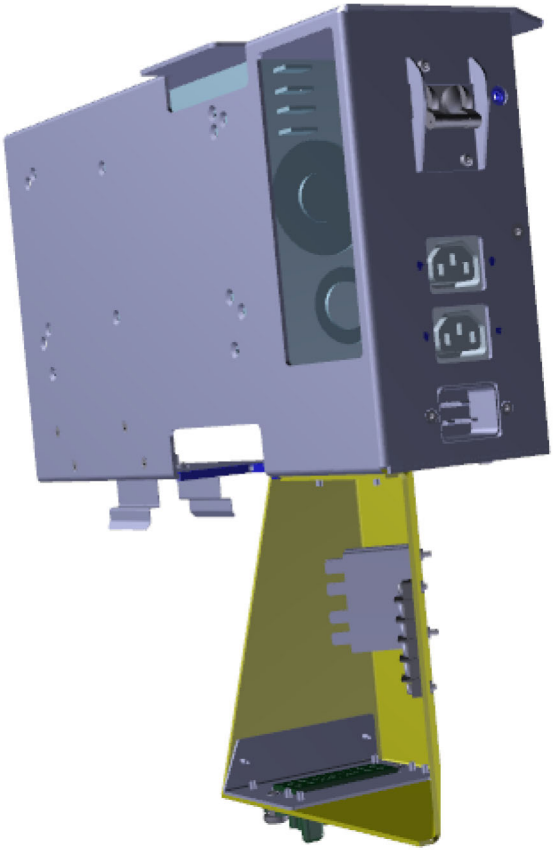 | TSQ All |
| **Thermo Scientific Part Number** | **1R120544-0002** |

NOTE: To replace all the M4 x 10 mm flat-head screws on the power supply, order PN 1R76937-0410. To replace all the M4 x 10 mm pan-head screws, order PN 1R76913-0410.

| Dynode and Multiplier Power Supply and Cables (EI only) | Quantity: Each |
|---|---|
| | Systems: All |

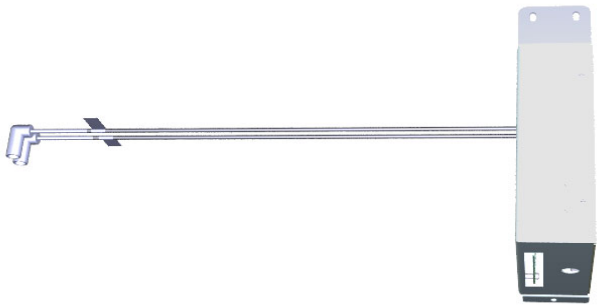

| Thermo Scientific Part Number | 1R120361-0003 |
|---|---|

NOTE: To replace all the M4 x 10 mm screws on the dynode and multiplier power supply, order two of PN 1R76913-0410. To replace the M4 x 16 mm screw, order PN 1R76913-0416.

# Vacuum Interlock Components

You can purchase the following vacuum interlock components for the any GC-MS system with a vacuum probe interlock. Be sure to include the component's part number when placing an order with your local Sales/Service Representative. See the hardware manuals for your system for information about installing these components or Table 1 for a comprehensive list of available components.

The following vacuum interlock components can be replaced.

- Inner Ball Seal
- Valve Axle
- Axle Seal
- Axle Bearing
- Sealing Ball
- Outer Ball Seal
- Valve Spring
- Vacuum Interlock Knob
- Clip
- Interior O-Ring
- Exterior O-Ring
- Vacuum Interlock Microswitch Assembly
- Vacuum Interlock Assembly (Old)
- Vacuum Interlock Assembly (ISQ 7000. ISQ 7610, TSQ 9000, and TSQ 9610)
- Front Manifold Plate Assembly, TSQ 9610 with VPI AEI

**Table 4.** Replaceable Components of the Vacuum Interlock

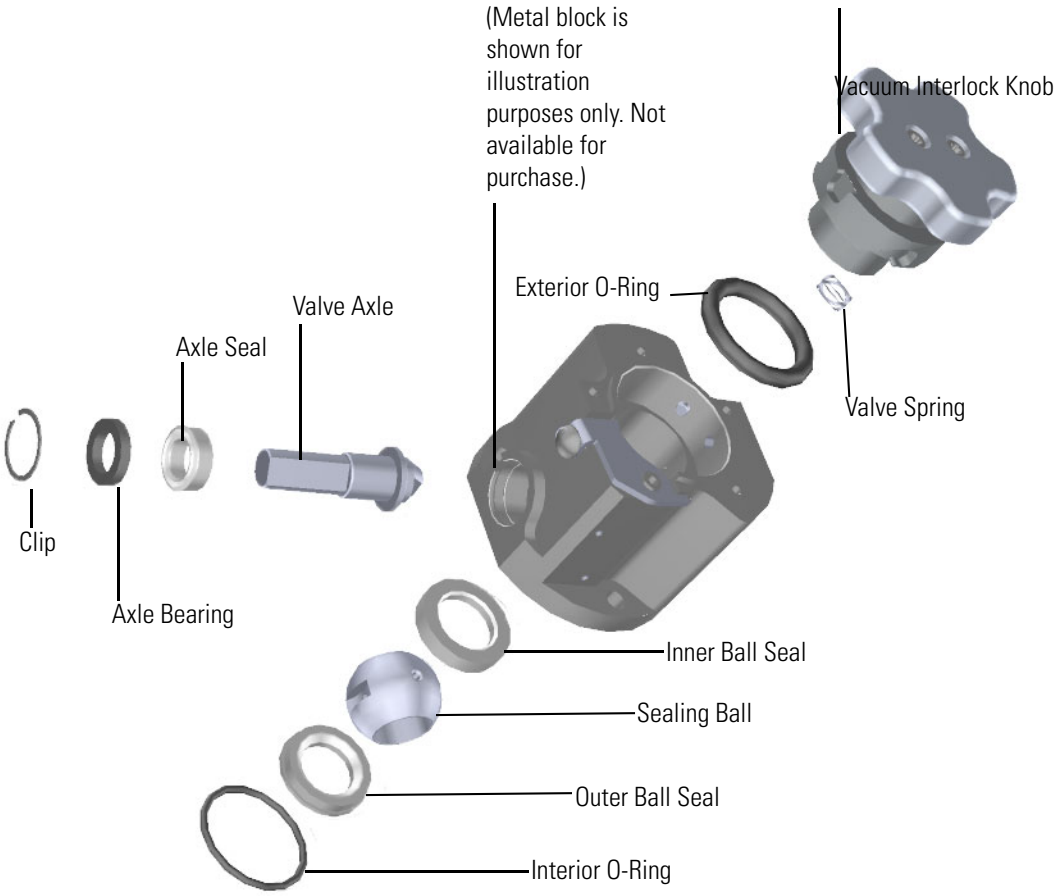


| **Inner Ball Seal** | **Quantity: Each** |
|---|---|
| | System: All VPI systems |
| **Thermo Scientific Part Number** | **1R120406-1008** |

| Valve Axle | Quantity: Each |
|---|---|
| 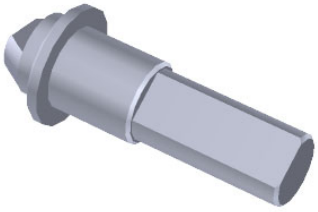 | System: All VPI systems |
| **Thermo Scientific Part Number** | **1R120406-1003** |

| Axle Seal | Quantity: Each |
|---|---|
| | System: All VPI systems |
| **Thermo Scientific Part Number** | **1R120406-2204** |

| Axle Bearing | Quantity: Each |
|---|---|
| 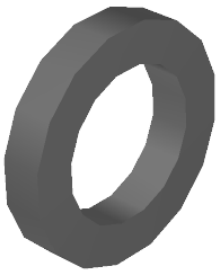 | System: All VPI systems |
| **Thermo Scientific Part Number** | **1R120406-1005** |

| Sealing Ball | Quantity: Each |
|---|---|
| 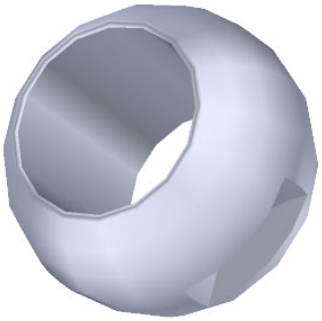 | System: All VPI systems |
| **Thermo Scientific Part Number** | **1R120406-1004** |

| Outer Ball Seal | Quantity: Each |
|---|---|
| 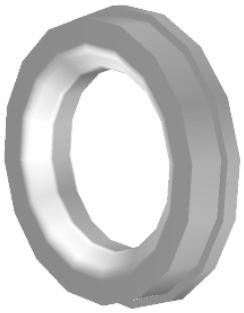 | System: All VPI systems |
| **Thermo Scientific Part Number** | **1R120406-1002** |

| Valve Spring | Quantity: Each |
|---|---|
| | System: All VPI systems |
| **Thermo Scientific Part Number** | **1R76485-1001** |

| Vacuum Interlock Knob | Quantity: Each |
|---|---|
| 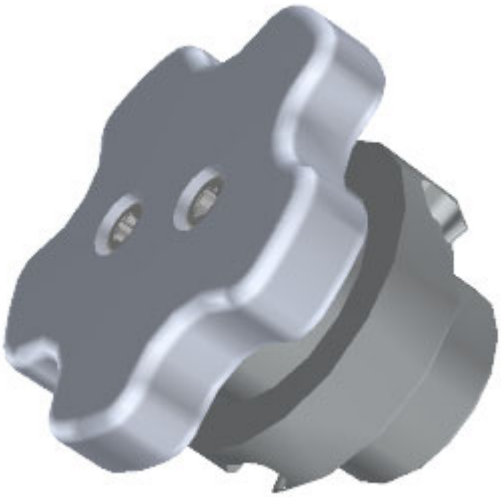 | System: All VPI systems |
| **Thermo Scientific Part Number** | **1R120406-3000** |

| Clip | Quantity: Pkg of 5 |
|---|---|
| 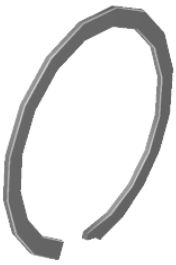 | System: All VPI systems |
| **Thermo Scientific Part Number** | **1R76483-2102** |

| Interior O-Ring | Quantity: 1 |
|---|---|
| | System: All VPI systems |
| **Thermo Scientific Part Number** | **1R3814-127** |

| Exterior O-Ring | Quantity: 1 |
|---|---|
| 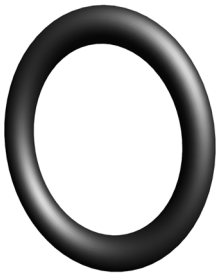 | System: All VPI systems |
| **Thermo Scientific Part Number** | **1R3815-320** |

| Vacuum Interlock Microswitch Assembly | Quantity: Assembly |
|---|---|
| 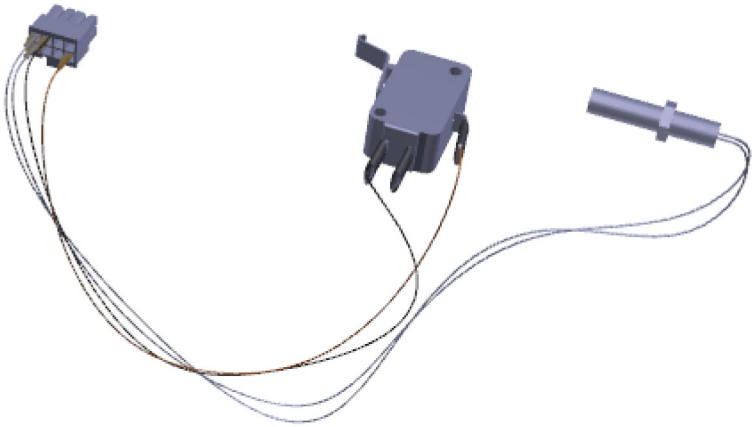 | System: All VPI systems |
| **Thermo Scientific Part Number** | **1R120406-1030** |

| Vacuum Interlock Assembly (Old) | Quantity: Assembly |
|---|---|
| 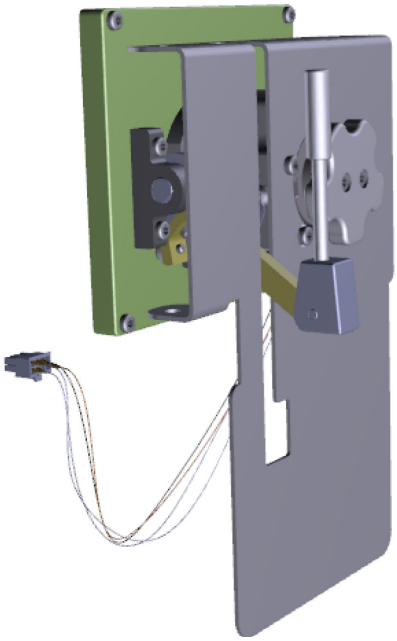 | Systems: ISQ, ISQ LT, TSQ 8000, TSQ 8000 Evo |
| **Thermo Scientific Part Number** | **1R120403-0001** |

| Vacuum Interlock Assembly (ISQ 7000. ISQ 7610, TSQ 9000, and TSQ 9610) | Quantity: Assembly |
|---|---|
| 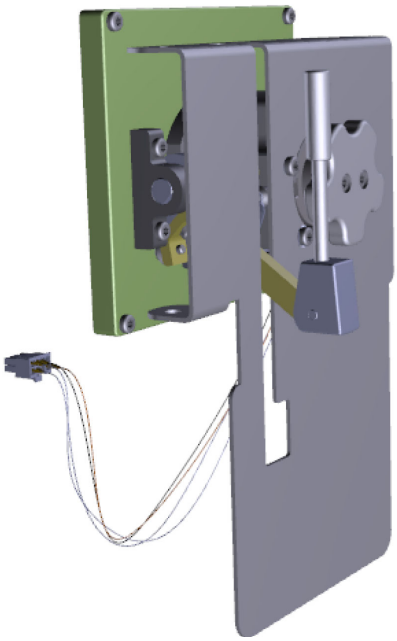 | Systems: ISQ 7000. ISQ 7610, TSQ 9000, and TSQ 9610 with VPI (except TSQ 9610 with VPI AEI) |
| **Thermo Scientific Part Number** | **1R120191-0012** |

| Front Manifold Plate Assembly, TSQ 9610 with VPI AEI | Quantity: Assembly |
|---|---|
| | Systems: TSQ 9610 with NVAEI |

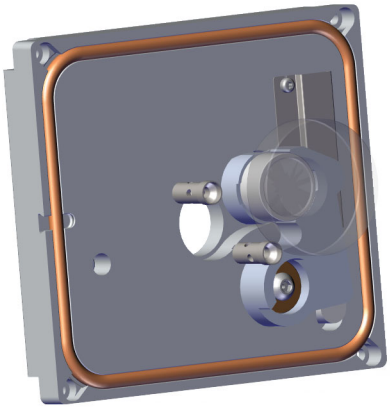

| Thermo Scientific Part Number | 1R120189-0012 |
|---|---|

# Manifold Components

You can purchase the following manifold components for the ISQ or TSQ GC-MS system. Be sure to include the component's part number when placing an order with your local Sales/Service Representative. See the hardware manual for your system for information about installing these components or Table 1 for a comprehensive list of available components.

- Manifold Door Hinge
- Front Manifold Plate (VPI)
- Front Manifold Plate Assembly (No VPI)
- Manifold O-Ring
- Vent Valve Knob
- Source Insertion Guide
- Alignment Pin
- Front Door Alignment Pin
- Source Magnet Retainer
- Magnet Yoke
- Source Magnets
- Back Manifold Plate

**Figure 10.** Replaceable Components of the No VPI Manifold

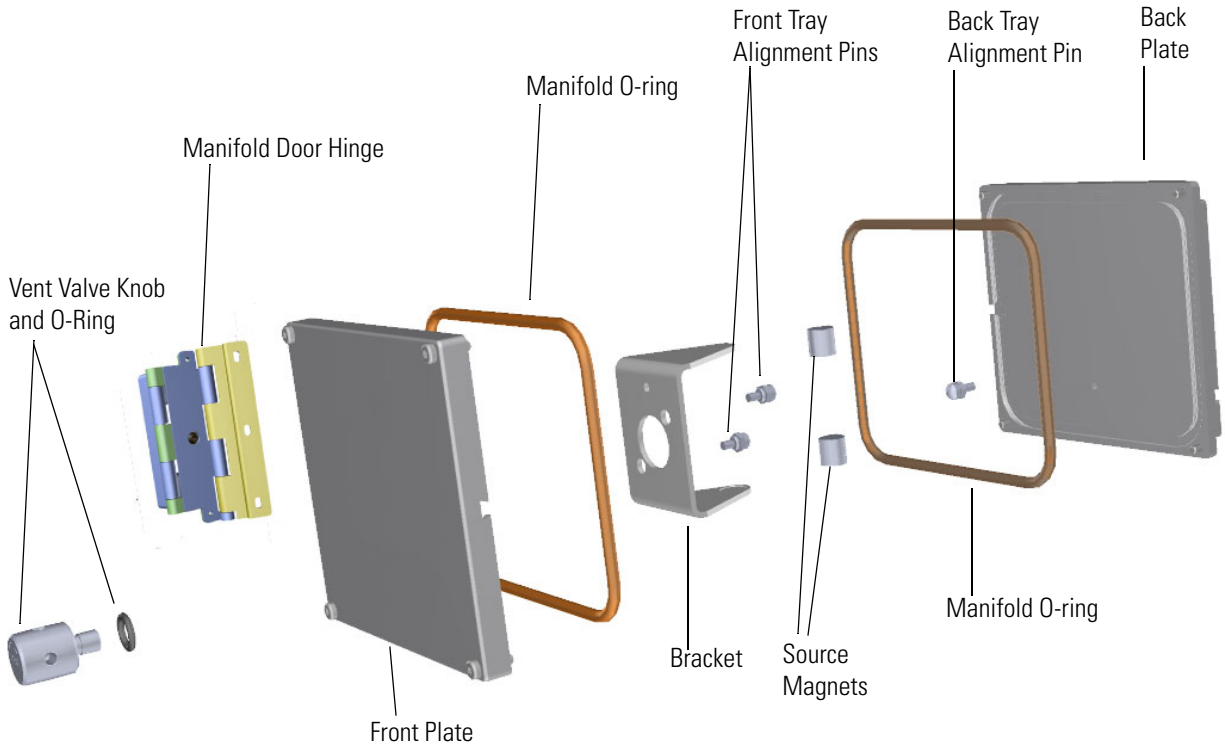

**Table 5.** Replaceable Components of the VPI Instrument Manifold

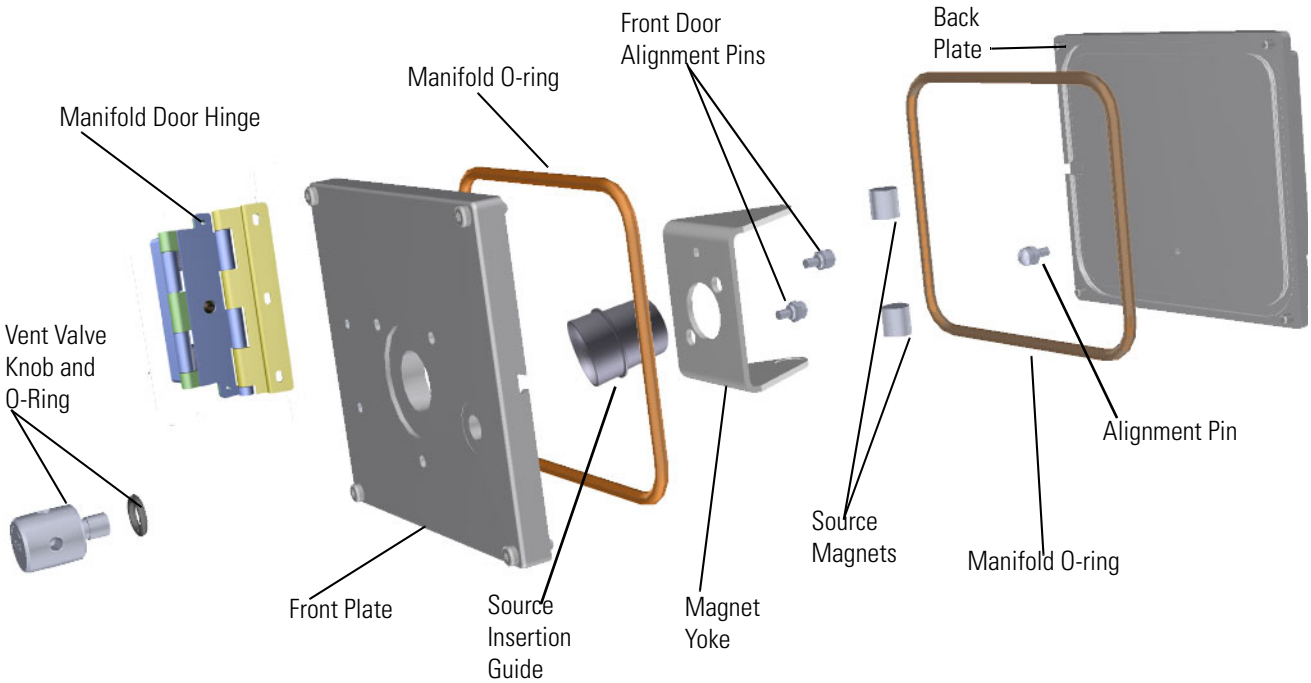

## Front Manifold Plate Assembly (No VPI)

**Quantity: Each**

Systems: All No VPI Systems

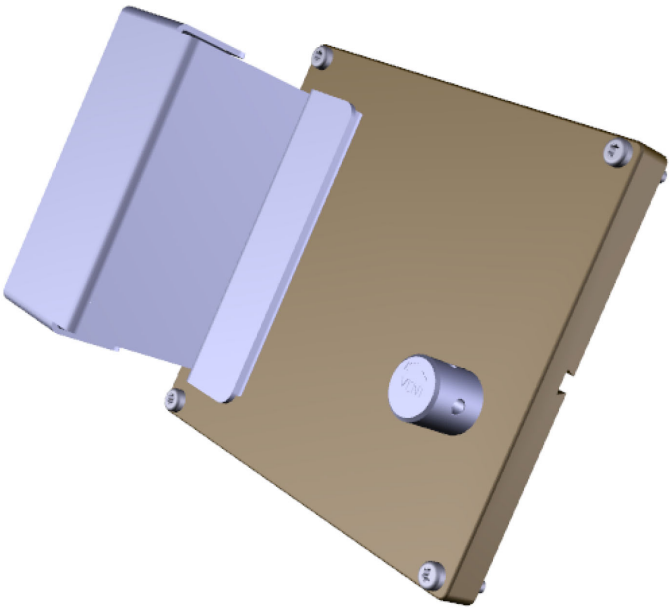

| Thermo Scientific Part Number | 1R120403-0002 |
|---|---|

NOTE: To replace all the M4 x 16 mm screws on the front manifold plate, order four of PN 1R76913-0416.

## Manifold O-Ring

Quantity: Each

System: All

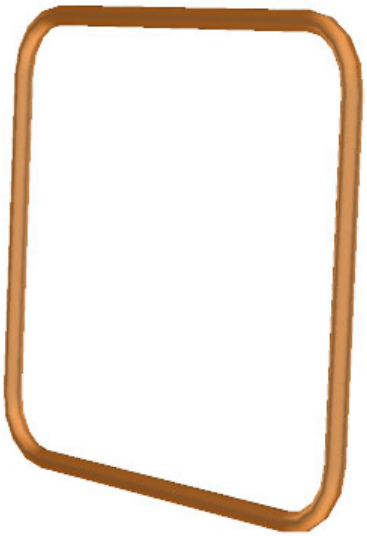

| Thermo Scientific Part Number | 1R3815-360 |
|---|---|

NOTE: There are four large manifold o-rings in the ISQ Series instrument: two on the top of the vacuum manifold, one at the front and one at the back. To replace all of the manifold o-rings, order four of PN 1R3815-360.

## Vent Valve Knob

**Quantity: Each**

System: All

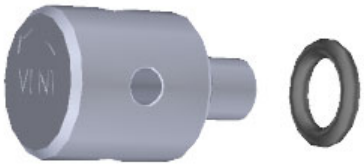

| Thermo Scientific Part Number | 1R120403-0104 |
|---|---|

NOTE: To replace the o-ring on the vent valve knob, order PN 1R3814-110.

## Manifold Door Hinge

**Quantity: Each**

System: All

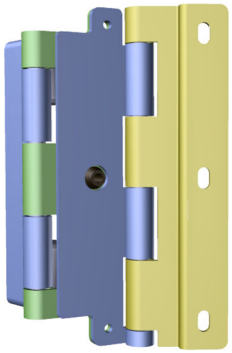

| Thermo Scientific Part Number | 1R120565-0001 |
|---|---|

NOTE: To replace all the M4 x 10 mm screws on the manifold door hinge, order three of PN 1R76913-0410.

| Front Manifold Plate (VPI) | Quantity: Each |
|---|---|
| | System: All VPI Systems |

| Thermo Scientific Part Number | 1R120403-0101 |
|---|---|

NOTE: To replace all the M4 x 16 mm screws on the front manifold plate, order four of PN 1R76913-0416.

**Figure 11.** Replaceable Components of the No VPI Manifold

\

| Source Insertion Guide | Quantity: Each |
|---|---|
| 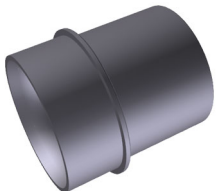 | System: All |
| **Thermo Scientific Part Number** | **1R120564-0001** |

| Alignment Pin | Quantity: Each |
|---|---|
| 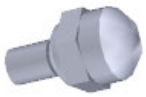 | Systems: ISQ, ISQ QD, ISQ LT, TSQ 8000, TSQ 8000 Evo, TSQ Duo |
| **Thermo Scientific Part Number** | **1R120403-0103** |

| Front Door Alignment Pin | Quantity: Each |
|---|---|
| 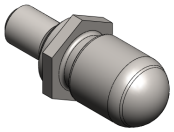 | Systems: ISQ, ISQ QD, ISQ LT, TSQ 8000, TSQ 8000 Evo, TSQ Duo |
| **Thermo Scientific Part Number** | **1R120564-0003** |

**Note** If your instrument has a source insertion guide, two front door alignment pins (PN 1R120564-0003) are used on the front door plate to hold the magnet yoke in place and align the door to the ion source. If your instrument was not manufactured with a source insertion guide, two alignment pins (PN 1R120403-0103) are used on the front door plate. All ISQ QD and ISQ LT instruments have 1R120564-0003 mounted on the front door plate. See Replaceable Components of the VPI Instrument Manifold to locate the source insertion guide on your instrument.

| Source Magnet Retainer | Quantity: Each |
|---|---|
| | Systems: ISQ 7000; TSQ 9000 |
| **Thermo Scientific Part Number** | **1R120602-0205** |

| Magnet Yoke | Quantity: Each |
|---|---|
| 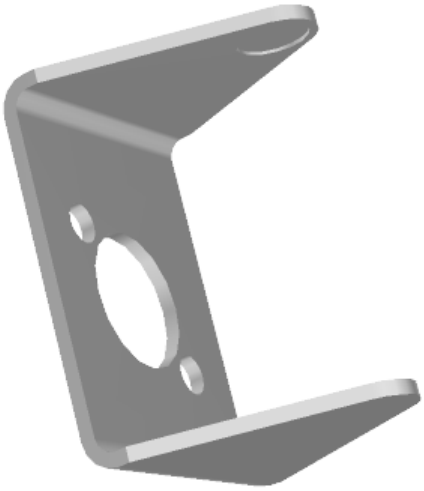 | System: All |
| **Thermo Scientific Part Number** | **1R120564-0002** |

| Source Magnets | Quantity: Each |
|---|---|
| | System: All |
| **Thermo Scientific Part Number** | **1R70001-98195** |

NOTE: There are two source magnets in the ISQ Series instrument, so to replace them, order two of PN 1R70001-98195.

| Back Manifold Plate | Quantity: Each |
|---|---|
| | System: All |

| Thermo Scientific Part Number | 1R120403-1001 |
|---|---|

NOTE: This PN includes the plate, alignment pin (1R120403-0103) and O-ring (1R3815-360). To replace all the M4 x 16 mm screws on the back manifold plate, order four of PN 1R76913-0416.

# Cover Components

You can purchase the following cover components for the ISQ and TSQ GC-MS system. Be sure to include the component's part number when placing an order with your local Sales/Service Representative. See the hardware manual for your instrument for information about installing these components or Table 1 for a comprehensive list of available components.

The following cover components can be replaced

- Right Side Panel-ISQ 7000
- Left Side Panel-ISQ
- Right Side Panel-ISQ Old
- Top Cover Panel-ISQ Systems
- ISQ Old Front Door Assembly (VPI)
- ISQ QD Front Door Assembly (No VPI)
- ISQ 7000 Front Door Assembly (No VPI)
- ISQ 7000 Front Door Assembly (with VPI)
- ISQ 7610 Front Door Assembly (no VPI)
- ISQ 7610 Front Door Assembly (with VPI)
- TSQ 8000 Evo Front Cover (with Vacuum Interlock Option)
- Right Side Panel-TSQ
- TSQ Duo Front Cover
- TSQ 9000 Front Cover (no VPI)
- TSQ 9000 Front Cover (with VPI)
- TSQ 9610 Front Cover (no VPI)
- TSQ 9610 Front Cover (with VPI)
- TSQ 9610 Front Cover (with NVAEI)
- Top Cover Panel-ISQ Systems
- Top Manifold Cover (glass)
- Front Door Hinge
- Front Door Hinge Support
- Front Door Latch
- Chassis Foot

**Figure 12.** Replaceable Covers

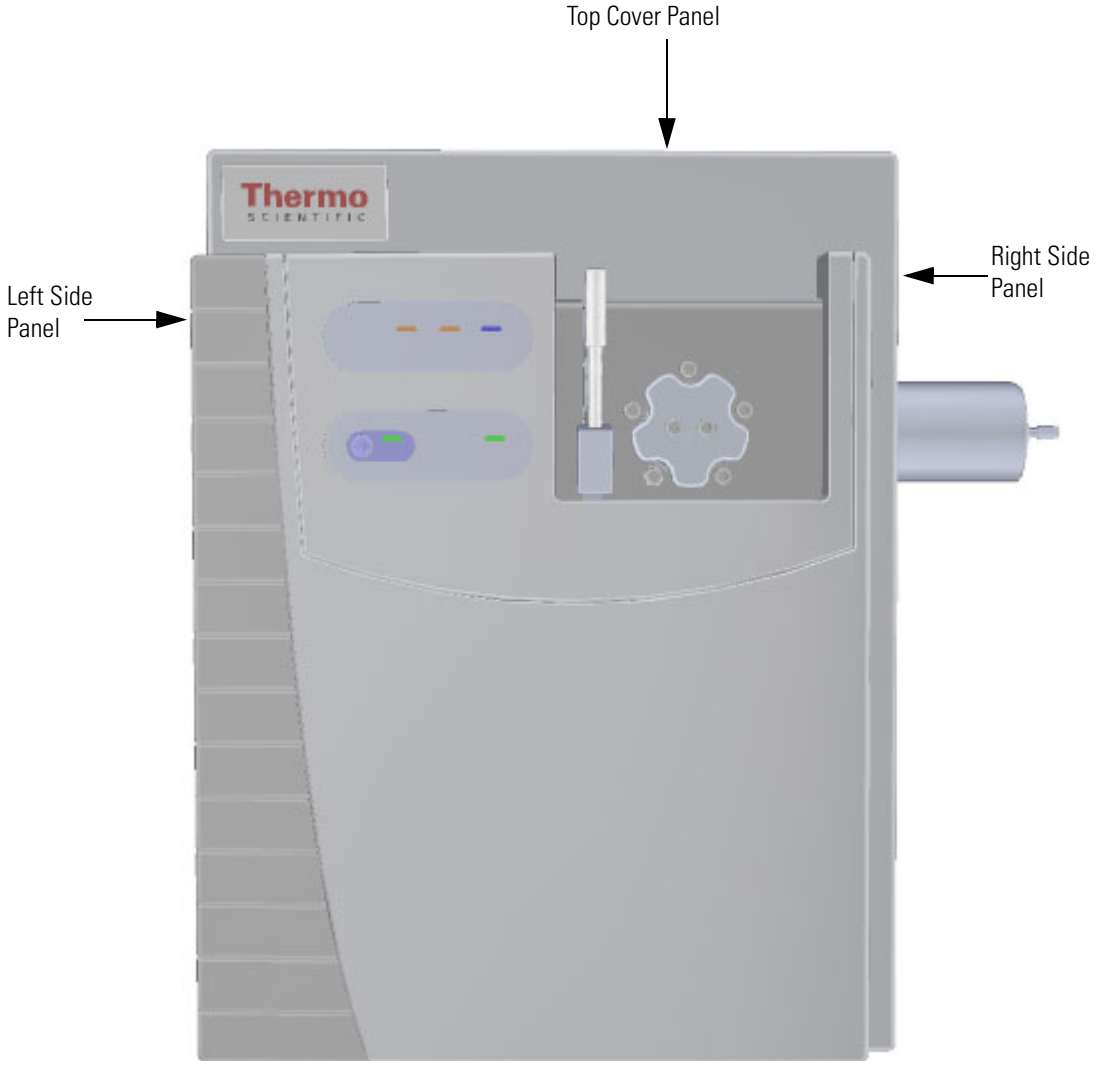

| Right Side Panel-ISQ Old | Quantity: Each |
|---|---|
| | System: ISQ, ISQ LT, ISQ QD |

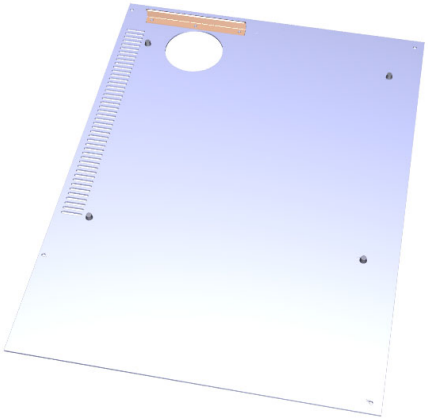

| Thermo Scientific Part Number | 1R120413-0001 |
|---|---|

NOTE: To replace all the M4 x 10 mm screws on the right side panel, order four of PN 1R76913-0410. To replace the right side panel feet, order PN 1R3666-0207.

| Right Side Panel-ISQ 7000 | Quantity: Each |
|---|---|
| | System: ISQ 7000 |

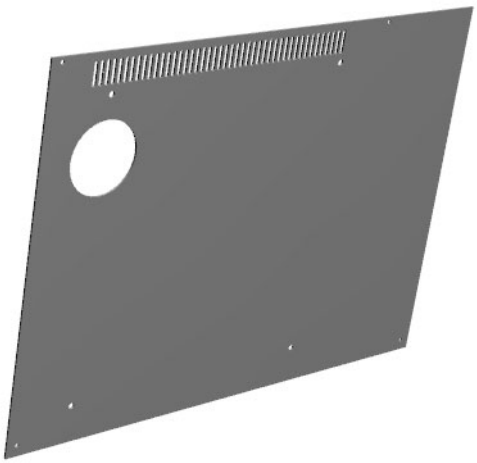

| Thermo Scientific Part Number | 1R120191-1020 |
|---|---|

NOTE: To replace all the M4 x 10 mm screws on the right side panel, order four of PN 1R76913-0410. To replace the right side panel feet, order PN 1R3666-0207.

| Left Side Panel-ISQ | Quantity: Each |
|---|---|
| | System: ISQ All |

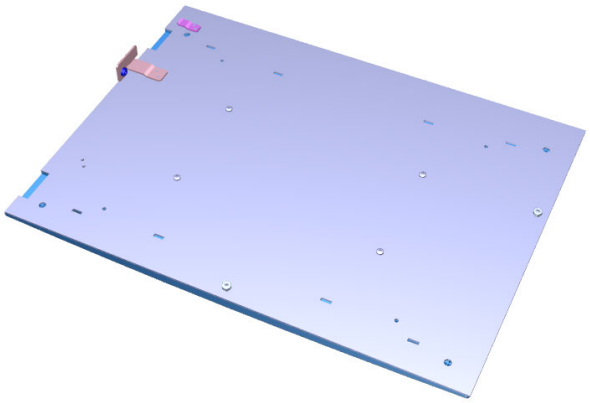

| Thermo Scientific Part Number | 1R120411-0001 |
|---|---|

| ISQ Old Front Door Assembly (VPI) | Quantity: Each |
|---|---|
| | System: ISQ, ISQ LT |

| Thermo Scientific Part Number | 1R120407-0100 |
|---|---|

NOTE: The door you receive will be painted.

| ISQ QD Front Door Assembly (No VPI) | Quantity: Each |
|---|---|
| | System: ISQ QD |

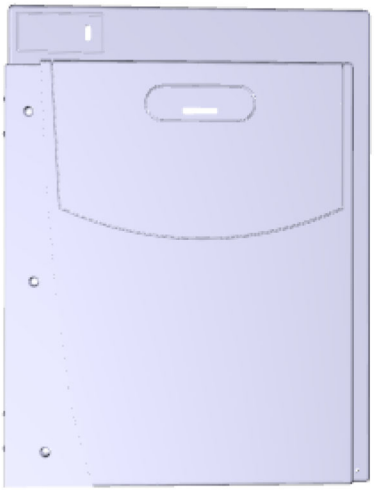

| Thermo Scientific Part Number | 1R120407-0200 |
|---|---|

NOTE: The door you receive will be painted.

| ISQ 7000 Front Door Assembly (No VPI) | Quantity: Each |
|---|---|
| | System: ISQ 7000 no VPI |

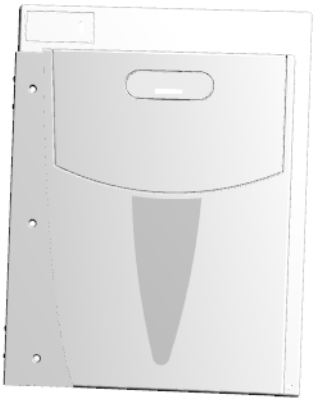

| Thermo Scientific Part Number | 1R120191-0200 |
|---|---|

NOTE: The door you receive will be painted.

| ISQ 7000 Front Door Assembly (with VPI) | Quantity: Each |
|---|---|

System: ISQ 7000 with VPI

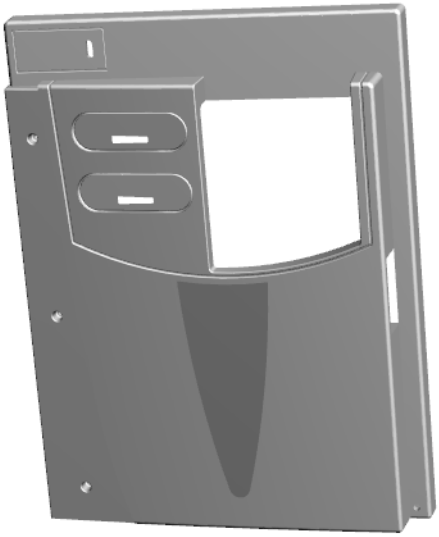

| Thermo Scientific Part Number | 1R120191-0100 |
|---|---|

NOTE: The door you receive will be painted.

| ISQ 7610 Front Door Assembly (with VPI) | Quantity: Each |
|---|---|

System: ISQ 7610 with VPI

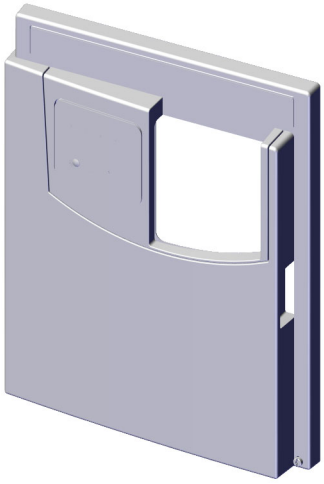

| Thermo Scientific Part Number | 1R120191-0110 |
|---|---|

NOTE: The door you receive will be painted.

| ISQ 7610 Front Door Assembly (no VPI) | Quantity: Each |
|---|---|
| | System: ISQ 7610 without VPI |

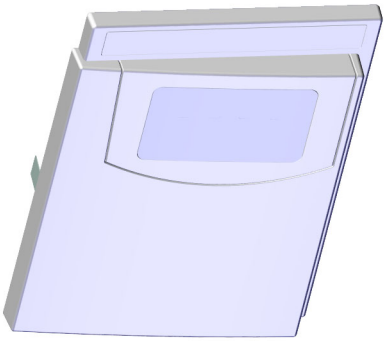

| Thermo Scientific Part Number | 1R120191-0210 |
|---|---|

NOTE: The door you receive will be painted.

| Top Cover Panel-ISQ Systems | Quantity: Each |
|---|---|
| | System: All ISQ systems |

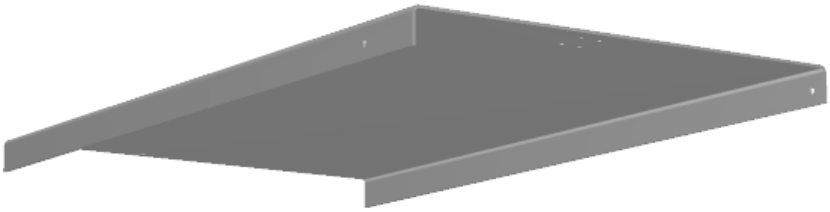

| Thermo Scientific Part Number | 1R120412-0001 |
|---|---|

NOTE: To replace all the M4 x 10 mm screws on the top cover panel, order two of PN 1R76913-0410.

## TSQ 8000 Evo Front Cover (with Vacuum Interlock Option)

**Quantity: Each**

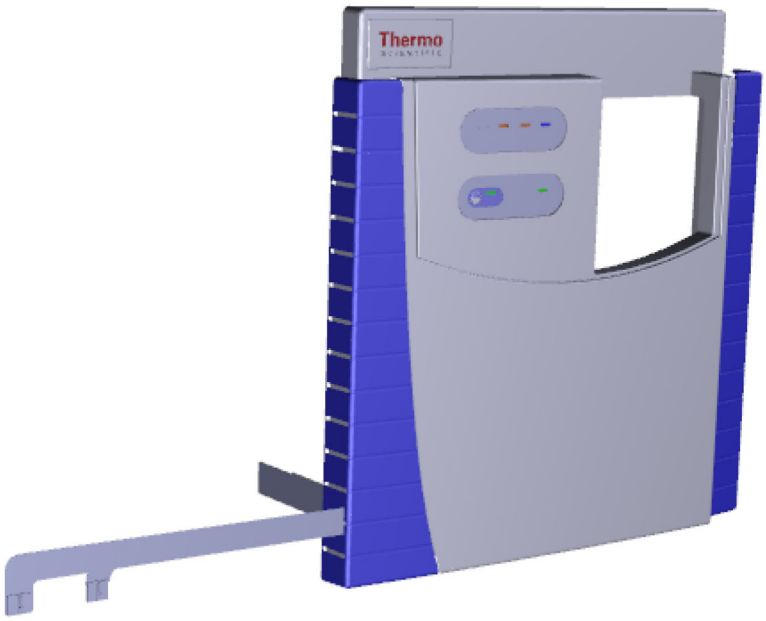


| Thermo Scientific Part Number | 1R120548-0300 |
|---|---|

NOTE: To replace the TSQ 8000 classic front cover, order PN 1R120548-0100. To replace the TSQ 8000 Evo front cover with no vacuum interlock option (sold in China only), order PN 1R120548-0400.

## Right Side Panel-TSQ

**Quantity: Each**

Systems: TSQ All

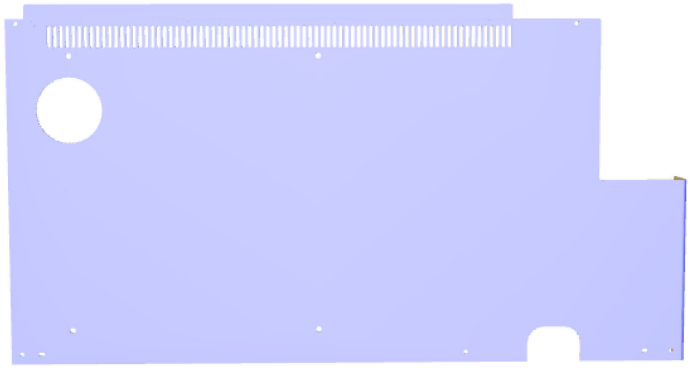

| Thermo Scientific Part Number | 1R120541-0200 |
|---|---|

NOTE: To replace all the M4 x 10 mm screws on the right side panel, order four of PN 1R76913-0410. To replace the right side panel feet, order PN 1R3666-0207.

| TSQ Duo Front Cover | Quantity: Each |
|---|---|
| 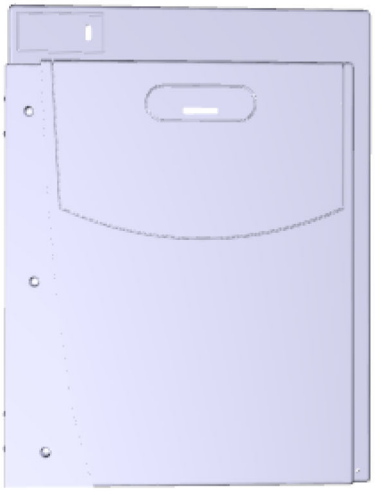 | System: TSQ Duo |
| **Thermo Scientific Part Number** | **1R120548-0200** |

| TSQ 9000 Front Cover (no VPI) | Quantity: Each |
|---|---|
| 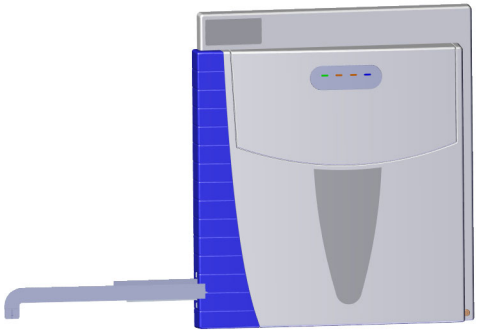 | System: TSQ 9000 without VPI |
| **Thermo Scientific Part Number** | **1R120192-0200** |

| TSQ 9000 Front Cover (with VPI) | Quantity: Each |
|---|---|
| | System: TSQ 9000 with VPI |
| **Thermo Scientific Part Number** | **1R120192-0100** |

| TSQ 9610 Front Cover (no VPI) | Quantity: Each |
|---|---|
| | System: TSQ 9610 no VPI |
| **Thermo Scientific Part Number** | **1R120192-0220** |

| TSQ 9610 Front Cover (with VPI) | Quantity: Each |
|---|---|
| 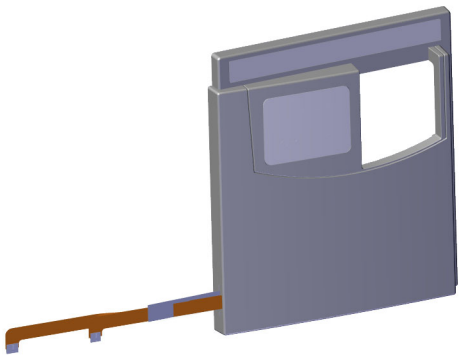 | System: TSQ 9610 with VPI |
| **Thermo Scientific Part Number** | **1R120192-0120** |

| TSQ 9610 Front Cover (with NVAEI) | Quantity: Each |
|---|---|
| 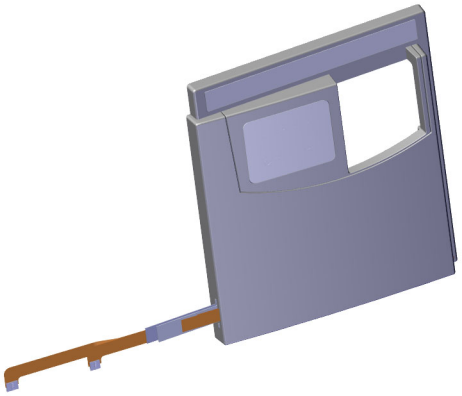 | System: TSQ 9610 with NVAEI |
| **Thermo Scientific Part Number** | **1R120189-0121** |

| Left Hand Front Panel | Quantity: Each |
|---|---|

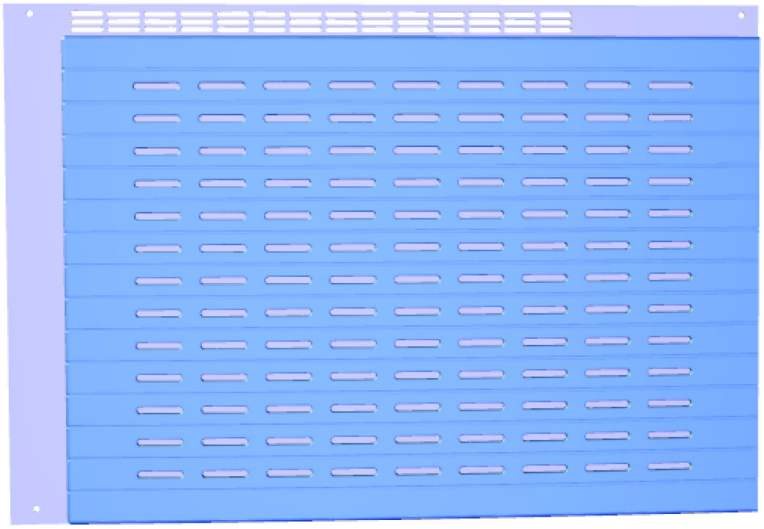

| Thermo Scientific Part Number | 1R120541-0003 |
|---|---|

NOTE: To replace all the M4 x 10 mm screws on the right side panel, order four of PN 1R76913-0410.

| Left Hand Sub Panel | Quantity: Each |
|---|---|

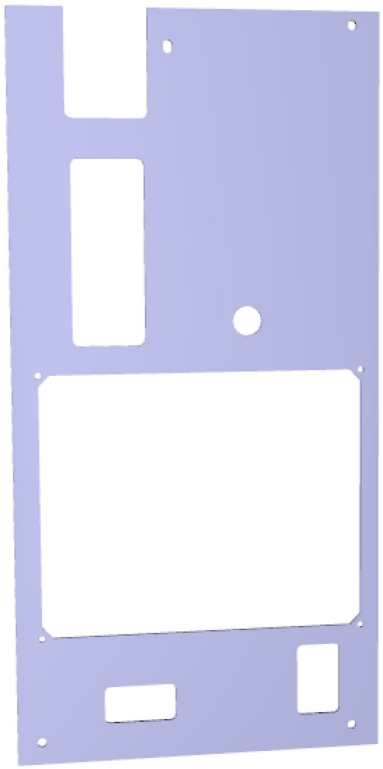

| Thermo Scientific Part Number | 1R120541-0500 |
|---|---|

| Top Cover | Quantity: Each |
|---|---|

| Thermo Scientific Part Number | 1R120541-0001 |
|---|---|

NOTE: To replace all the M4 x 10 mm screws on the top cover panel, order two of PN 1R76913-0410.

| Top Manifold Cover (glass) | Quantity: Each |
|---|---|
| | System: All |
| **Thermo Scientific Part Number** | **1R120401-3000** |

| Front Door Hinge | Quantity: Each |
|---|---|
| 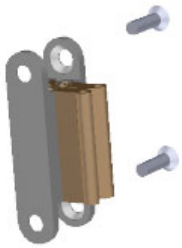 | System: All |
| **Thermo Scientific Part Number** | **1R3434-5000** |

NOTE: To replace all the M3 x 8 mm (flathead) screws on a front door hinge, order two of PN 1R76937-0308. There are two hinges on the front door.

| Front Door Hinge Support | Quantity: Each |
|---|---|
| 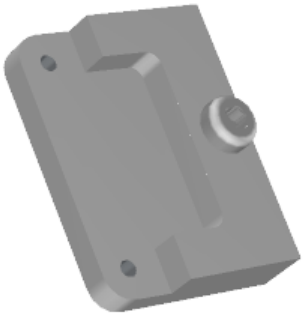 | System: All |

| Front Door Hinge Support | Quantity: Each |
|---|---|
| **Thermo Scientific Part Number** | **1R120445-0001** |

NOTE: To replace the M4 x 10 mm screw on the front door hinge supports, order PN 1R76913-0410.

| Front Door Latch | Quantity: Each |
|---|---|
| 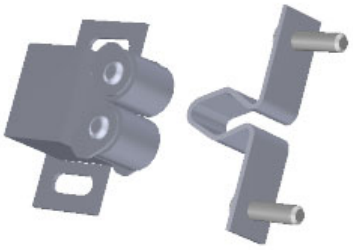 | System: All |
| **Thermo Scientific Part Number** | **1R76483-3000** |

NOTE: To replace all the screws on the front door latch, order two of PN 1R120414-0010. To replace all the M3 locking nuts, order two of PN 1R76944-0100.

| Chassis Foot | Quantity: Each |
|---|---|
| | System: All |
| **Thermo Scientific Part Number** | **1R3666-0206** |

NOTE: There are four feet on the bottom of the ISQ Series instruments, and six on the TSQ Series instruments, so to replace them, order four or six of PN 1R3666-0206. To replace the M4 x 12 mm screw on each chassis foot, order 1R76913-0412.

# Pump Components

The following pump components are available for the ISQ and TSQ GC-MS instruments. Refer to the hardware manual for your instrument for installation instructions and to Table 1 for a complete list of pump components.

- Small Capacity Turbomolecular Pump (75 DX)
- Medium Turbomolecular Pump
- Large Turbomolecular Pump
- Convectron Gauge
- Rough Pump (RV3)
- Foreline Adapter

| **Small Capacity Turbomolecular Pump (75 DX)** | **Quantity: Each** |
|---|---|
| 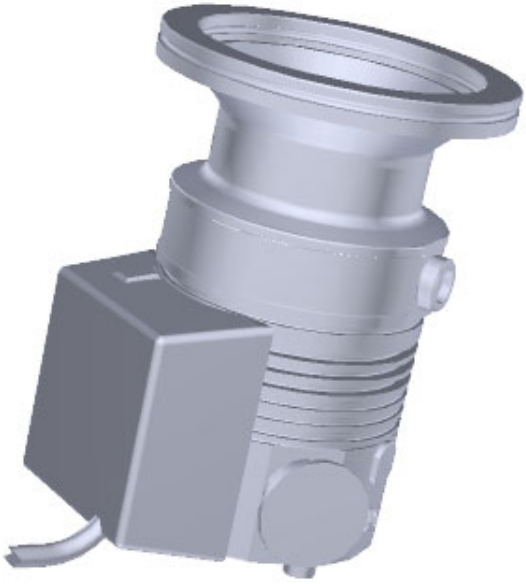 | System: All ISQ systems |
| **Thermo Scientific Part Number** | **1R119268-0004** |

NOTE: If you are upgrading from the 70 DX pump, order the conversion kit PN 1R120567-0001.

| Medium Turbomolecular Pump | Quantity: Each |
|---|---|
| | System: TSQ 9000, TSQ 9610 |
| **Thermo Scientific Part Number** | **1R119268-0003** |

| Large Turbomolecular Pump | Quantity: Each |
|---|---|
| | System: TSQ 9000; TSQ 9610 |
| **Thermo Scientific Part Number** | **1R119268-0002** |

| Convectron Gauge | Quantity: Each |
|---|---|
| 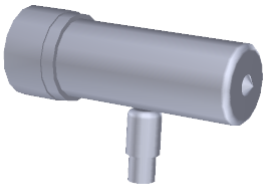 | System: All |
| **Thermo Scientific Part Number** | **A0105-00501** |

| Rough Pump (RV3) | Quantity: Each |
|---|---|
| 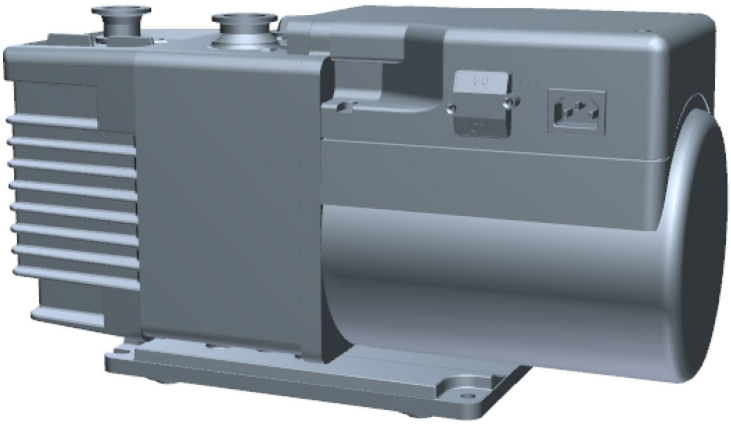 | System: All |
| **Thermo Scientific Part Number** | **1R76505-3007** |

| Foreline Adapter | Quantity: Each |
|---|---|
| 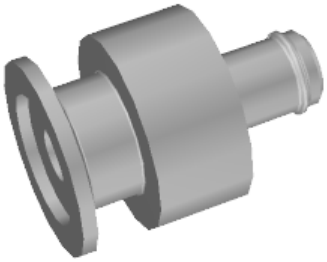 | System: All |
| **Thermo Scientific Part Number** | **1R119244-0025** |

# MS System Tools

The MS systems ship with a toolkit that contains all the tools you will need to perform maintenance on the instrument. It does not contain any consumable items or cleaning supplies. You can purchase any item in the toolkit individually or you can order a complete kit. Contact your local Sales/Service Representative to place an order. See Table 1 for a comprehensive list of available components.

The following toolkit components can be replaced.

- MS Toolkit
- ISQ 7000, ISQ 7610, TSQ 9000, and TSQ 9610 VPI MS Toolkit
- NVAEI MS Toolkit
- VPI MS Toolkit
- Source Exchange Tool
- NeverVent AEI Source Exchange Tool
- Small Source Removal Tool
- NVAEI Small Source Removal Tool
- Bushing in the Source Exchange Tool
- Seal in the Source Exchange Tool
- Clip in the Source Exchange Tool
- Column Measuring Tool
- Source Holder
- T10 Torxhead Key
- T20 Torxhead Key
- T30 Torxhead Key
- Forceps, 8 in.
- Wrench, open-ended, 1/4-in., 5/16-in.
- Wrench, open-ended, 3/8 in., 7/16-in.
- Source Plug
- Source Plug Holder
- Source Plug O-ring

| MS Toolkit | Quantity: Each |
|---|---|
| 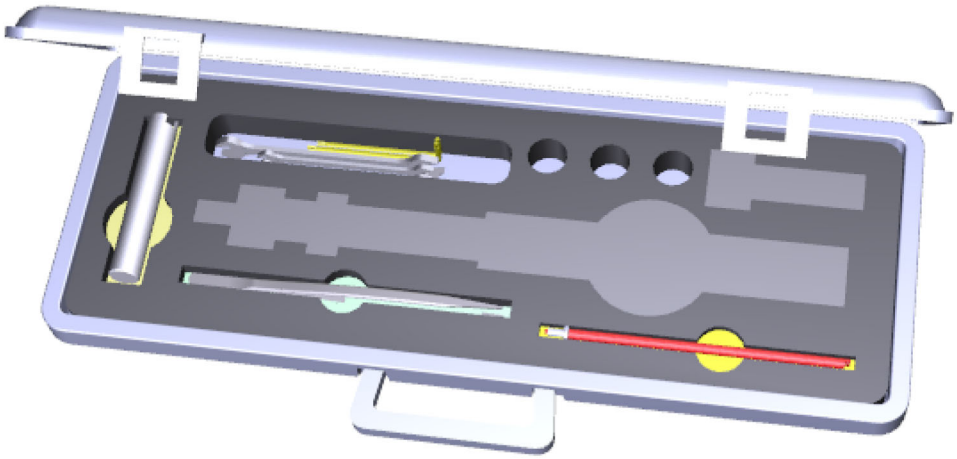 | Systems: All No-VPI systems |
| **Thermo Scientific Part Number** | **1R120467-0001** |

| ISQ 7000, ISQ 7610, TSQ 9000, and TSQ 9610 VPI MS Toolkit | Quantity: Each |
|---|---|
| | Systems: ISQ 7000, ISQ 7610, TSQ 9000, and TSQ 9610 VPI Systems |
| **Thermo Scientific Part Number** | **1R120467-0004** |

| NVAEI MS Toolkit | Quantity: Each |
|---|---|
| | Systems: TSQ 9610 NVAEI Systems |

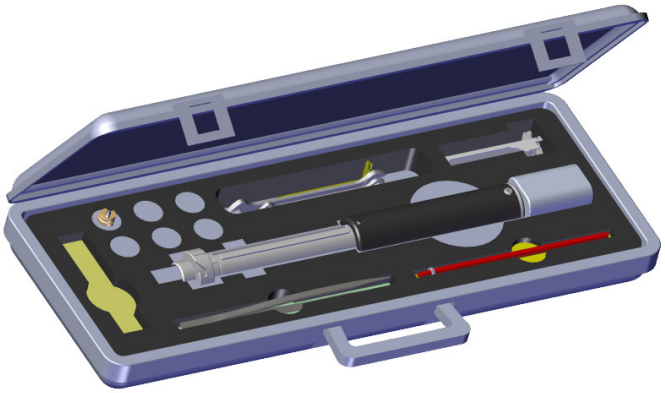

| Thermo Scientific Part Number | 1R120189-6200 |
|---|---|

| VPI MS Toolkit | Quantity: Each |
|---|---|
| | Systems: ISQ, ISQ LT, TSQ 8000, TSQ 8000 Evo |

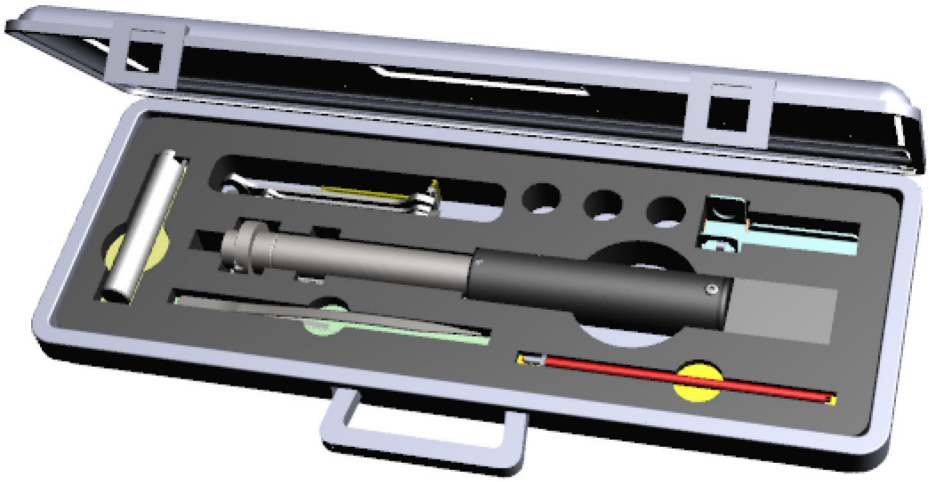

| Thermo Scientific Part Number | 1R120467-0002 |
|---|---|

| Source Exchange Tool | Quantity: Each |
|---|---|
| | Systems: All VPI Systems |
| **Thermo Scientific Part Number** | **1R120406-2000** |

| NeverVent AEI Source Exchange Tool | Quantity: Each |
|---|---|
| 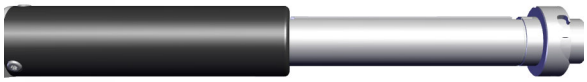 | Systems: TSQ 9610 with NVAEI |
| **Thermo Scientific Part Number** | **1R120189-0003** |

| Small Source Removal Tool | Quantity: Each |
|---|---|
| 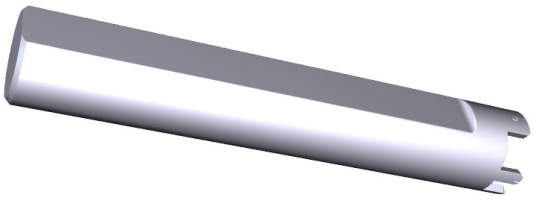 | Systems: All except TSQ 9610 VPI with AEI |
| **Thermo Scientific Part Number** | **1R120406-2250** |

| NVAEI Small Source Removal Tool | Quantity: Each |
|---|---|
| 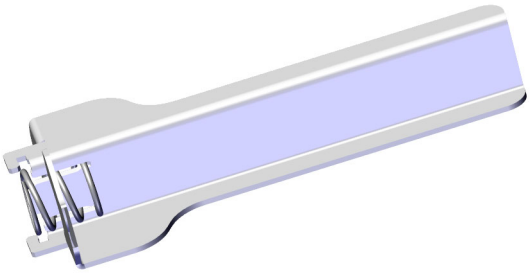 | Systems: TSQ 9610 with NVAEI |
| **Thermo Scientific Part Number** | **1R120189-1017** |

| Bushing in the Source Exchange Tool | Quantity: Each |
|---|---|
| 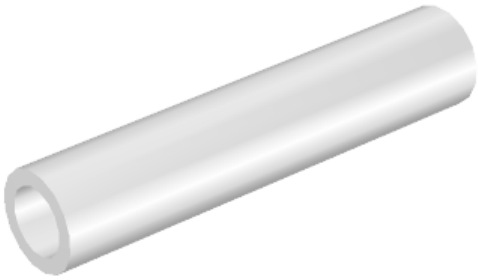 | Systems: All VPI Systems |
| **Thermo Scientific Part Number** | **1R120406-2203** |

| Seal in the Source Exchange Tool | Quantity: Each |
|---|---|
| | Systems: All VPI Systems |
| **Thermo Scientific Part Number** | **1R120406-2204** |

| Clip in the Source Exchange Tool | Quantity: Pkg of 5 |
|---|---|
| | Systems: All VPI Systems |
| **Thermo Scientific Part Number** | **1R76483-2102** |

| Column Measuring Tool | Quantity: Each |
|---|---|
| | Systems: All |
| **Thermo Scientific Part Number** | **1R120461-0010** |

| Source Holder | Quantity: Each |
|---|---|
| 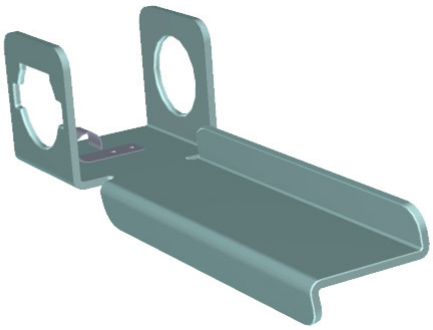 | Systems: All except TSQ 9610 with VPI and AEI |
| **Thermo Scientific Part Number** | **1R120471-0001** |

| Source Holder, NVAEI | Quantity: Each |
|---|---|
| | Systems: TSQ 9610 with NVAEI |
| **Thermo Scientific Part Number** | **1R120189-2303** |

| T10 Torxhead Key | Quantity: Each |
|---|---|
| | Systems: All |
| **Thermo Scientific Part Number** | **1R3812-5T10** |

| T20 Torxhead Key | Quantity: Each |
|---|---|
| | Systems: All |
| **Thermo Scientific Part Number** | **1R3812-5T20** |

| T30 Torxhead Key | Quantity: Each |
|---|---|
| | Systems: All |
| **Thermo Scientific Part Number** | **1R3812-5T30** |

| Forceps, 8 in. | Quantity: Each |
|---|---|
| | Systems: All |
| **Thermo Scientific Part Number** | **1R76360-0008** |

| Wrench, open-ended, 1/4-in., 5/16-in. | Quantity: Each |
|---|---|
| | Systems: All |
| **Thermo Scientific Part Number** | **1R76360-0109** |

| Wrench, open-ended, 3/8 in., 7/16-in. | Quantity: Each |
|---|---|
| | Systems: All |
| **Thermo Scientific Part Number** | **1R76360-0108** |

| Source Plug | Quantity: Each |
|---|---|
| | Systems: ISQ 7000 and TSQ 9000 VPI systems |
| **Thermo Scientific Part Number** | **1R120589-2000** |

| Source Plug Holder | Quantity: Each |
|---|---|
| | Systems: ISQ 7000 and TSQ 9000 VPI systems |
| **Thermo Scientific Part Number** | **1R120589-1050** |

| Source Plug O-ring | Quantity: Each |
|---|---|
| | Systems: ISQ 7000 and TSQ 9000 VPI systems |
| **Thermo Scientific Part Number** | **1R3816-202** |

# Upgrade Equipment

The following upgrade equipment is available for the ISQ and TSQ GC-MS instruments. Contact your local Sales/Service Representative to place an order. Once you receive the equipment, refer to the hardware manual for your instrument for installation information or Table 1 for a comprehensive list of available components.

- CI Ion Source Cartridge
- AEI Ion Source Assembly
- CI Reagent Gas Flow Module
- CI Ion Volume
- EI/CI Ion Volume
- Hydrogen Ion Volume
- Dynode and Multiplier Power Supply and Cables (EI/CI)
- AEI Ion Volume
- AEI Ion Source Sleeve
- AEI Filament Retainer
- AEI Filament Spacer
- AEI Filament Shield
- AEI Ion Volume Insulator
- AEI Filament Insulator
- AEI Front Plate Assembly
- Source Magnet Retainer
- AEI Case Insert
- AEI Case
- AEI Magnet Retainer Bracket
- AEI Magnet
- AEI Source Magnet Assembly
- NeverVent AEI Ion Source Cartridge
- NeverVent AEI Ion Volume
- NeverVent AEI Filament
- NeverVent AEI Ion Cartridge Sleeve
- NeverVent AEI Filament Insulator
- NeverVent AEI Filament Cap
- NeverVent AEI Filament Spring

- Ion Gauge Option
- Ion Gauge Controller PCB
- Ion Gauge Tube Shield
- Large Turbomolecular Pump (nEXT 300D)
- Dust Filters
- Ion Gauge Mount
- Direct Insert Probe
- Direct Exposure Probe

**Figure 13.** CI Ion Source Cartridge Components

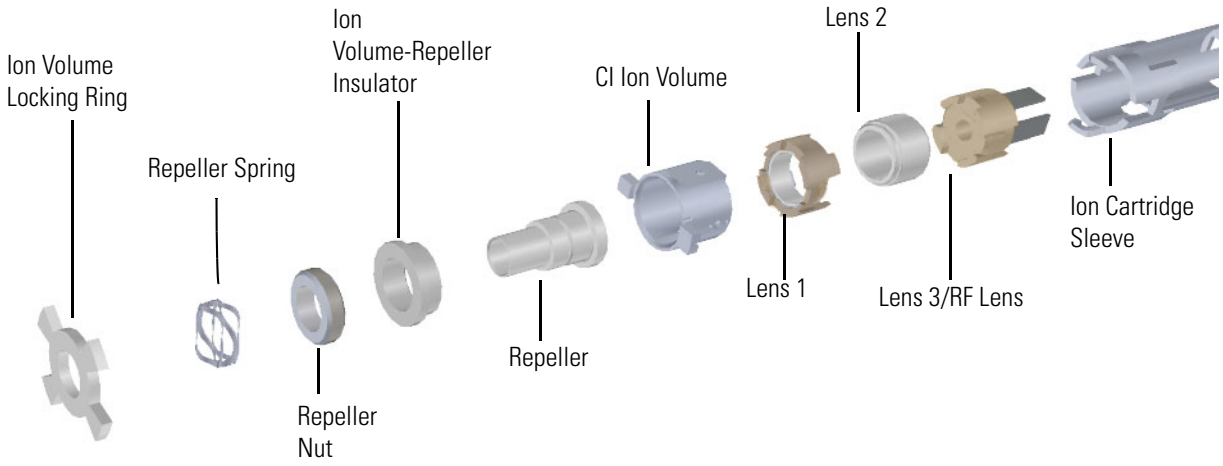

**Figure 14.** AEI Ion Source Cartridge Components

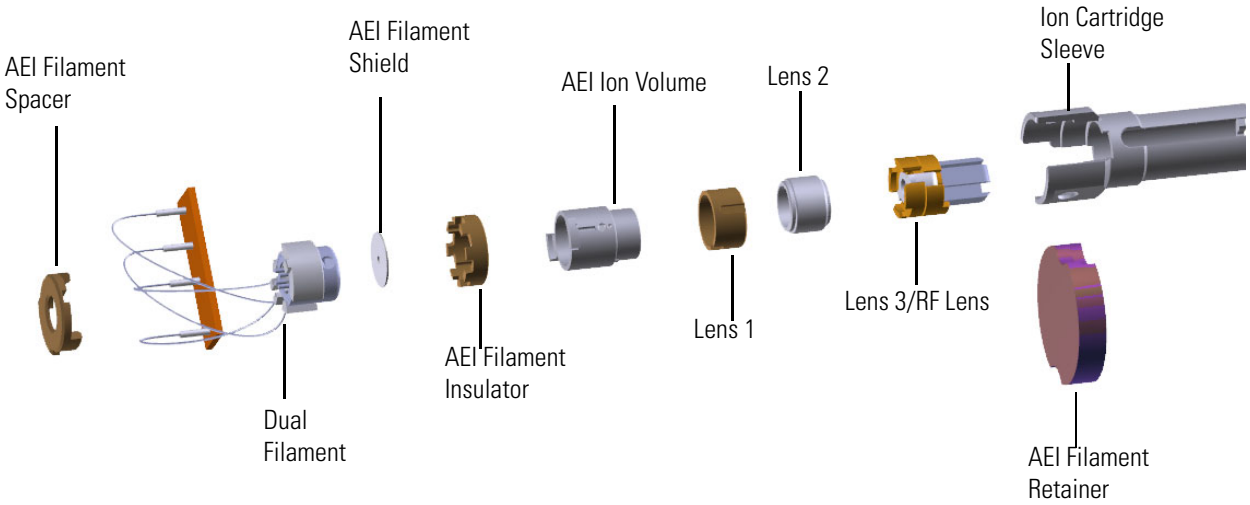


**Figure 15.** NeverVent AEI Ion Source Cartridge Components

R

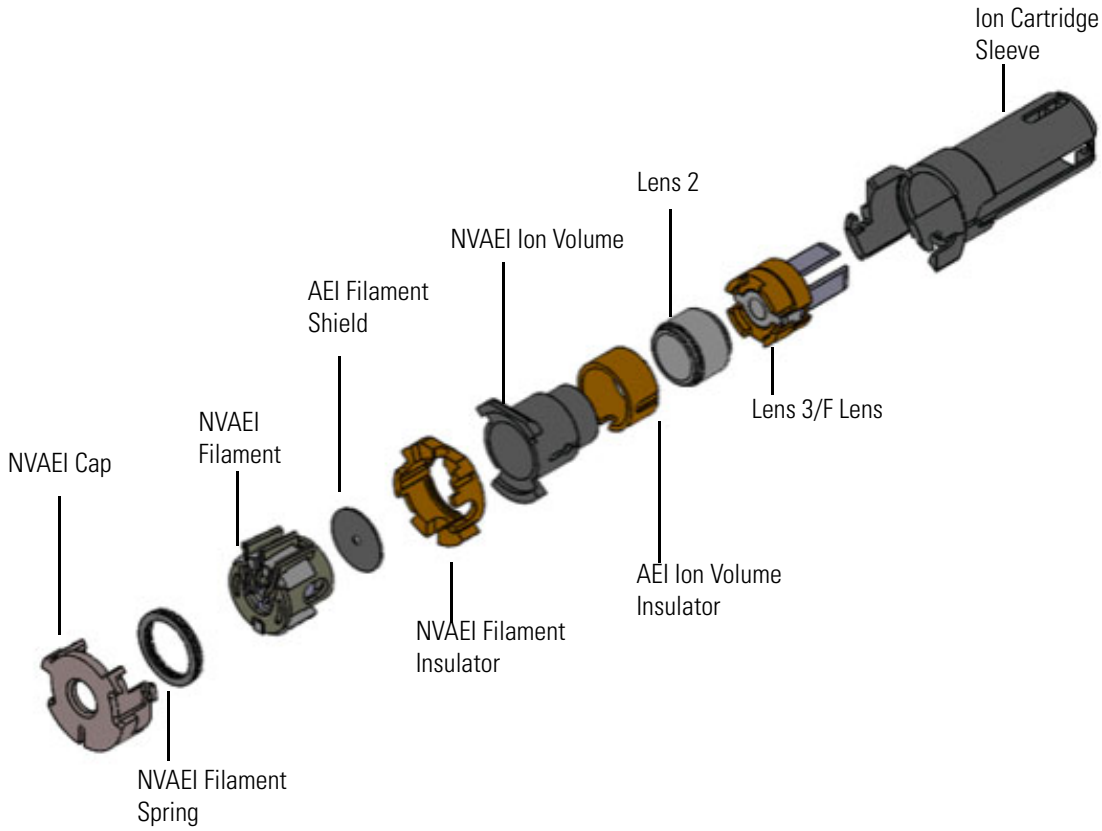

| CI Ion Source Cartridge | Quantity: Each |
|---|---|
| 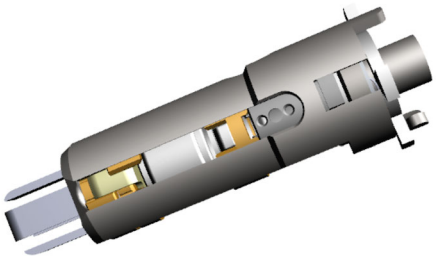 | Systems: All |
| **Thermo Scientific Part Number** | **1R120404-4500** |

| AEI Ion Source Assembly | Quantity: Each |
|---|---|
| 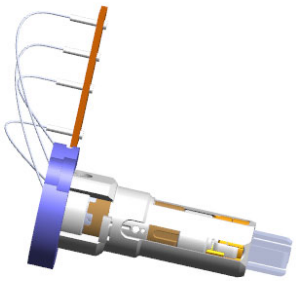 | Systems: ISQ 7000 and TSQ 9000 |
| **Thermo Scientific Part Number** | **1R120602-1300** |

| CI Reagent Gas Flow Module | Quantity: Each |
|---|---|
| 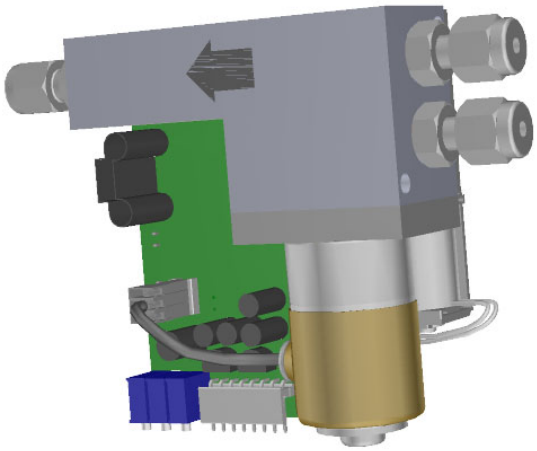 | Systems: All |
| **Thermo Scientific Part Number** | **1R23331-0092** |

| CI Ion Volume | Quantity: Each |
|---|---|
| | Systems: All |
| **Thermo Scientific Part Number** | **1R120404-4112** |

| EI/CI Ion Volume | Quantity: Each |
|---|---|
| 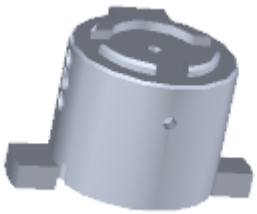 | Systems: All |
| **Thermo Scientific Part Number** | **1R120404-4113** |

| Hydrogen Ion Volume | Quantity: Each |
|---|---|
| 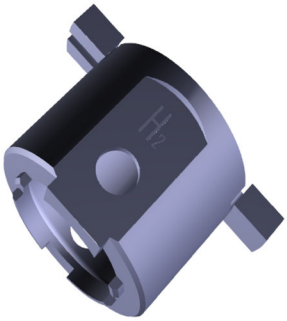 | Systems: ISQ, ISQ QD, ISQ LT, TSQ 8000, TSQ 8000 Evo, TSQ Duo |
| **Thermo Scientific Part Number** | **1R120404-4115** |

| Dynode and Multiplier Power Supply and Cables (EI/CI) | Quantity: Each |
|---|---|
| 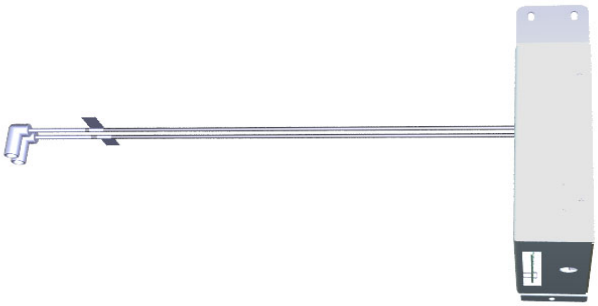 | Systems: All |
| **Thermo Scientific Part Number** | **1R120361-0007** |

NOTE: To replace all the M4 x 10 mm screws on the dynode and multiplier power supply, order two of PN 1R76913-0410. To replace the M4 x 16 mm screw, order PN 1R76913-0416.

| AEI Ion Volume | Quantity: Each |
|---|---|
| | Systems: ISQ 7000, ISQ 7610, TSQ 900, TSQ 9610 |
| **Thermo Scientific Part Number** | **1R120602-0104** |

| AEI Ion Source Sleeve | Quantity: Each |
|---|---|
| 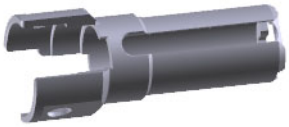 | Systems: ISQ 7000, ISQ 7610, TSQ 900, TSQ 9610 |
| **Thermo Scientific Part Number** | **1R120602-0101** |

| AEI Filament Retainer | Quantity: Each |
|---|---|
| | Systems: ISQ 7000, ISQ 7610, TSQ 900, TSQ 9610 |
| **Thermo Scientific Part Number** | **1R120602-0102** |

| AEI Filament Spacer | Quantity: Each |
|---|---|
| | Systems: ISQ 7000, ISQ 7610, TSQ 900, TSQ 9610 |
| **Thermo Scientific Part Number** | **1R120602-0103** |

| AEI Filament Shield | Quantity: Each |
|---|---|
| | Systems: Systems: ISQ 7000, ISQ 7610, TSQ 900, TSQ 9610 |
| **Thermo Scientific Part Number** | **1R120602-0105** |

| AEI Ion Volume Insulator | Quantity: Each |
|---|---|
| | Systems: ISQ 7000; TSQ 9000 |
| **Thermo Scientific Part Number** | **1R120602-0106** |

| AEI Filament Insulator | Quantity: Each |
|---|---|
| | Systems: ISQ 7000; TSQ 9000 |
| **Thermo Scientific Part Number** | **1R120602-0108** |

| AEI Front Plate Assembly | Quantity: Each |
|---|---|
| 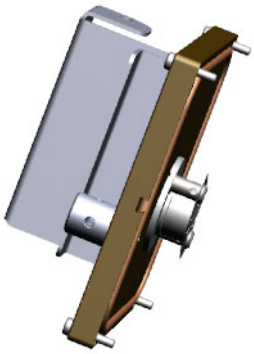 | Systems: ISQ 7000;<br>TSQ 9000 with AEI Source |
| **Thermo Scientific Part Number** | **1R120191-0014** |

| AEI Case Insert | Quantity: Each |
|---|---|
| 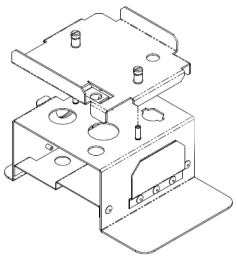 | Systems: ISQ 7000;<br>TSQ 9000 with AEI source |
| **Thermo Scientific Part Number** | **1R120602-1100** |

| AEI Case | Quantity: Each |
|---|---|
| | Systems: ISQ 7000;<br>TSQ 9000 with AEI source |
| **Thermo Scientific Part Number** | **1R76524-0020** |

| AEI Magnet Retainer Bracket | Quantity: Each |
|---|---|
| 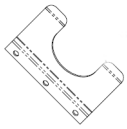 | Systems: ISQ 7000; TSQ 9000 with AEI source |
| **Thermo Scientific Part Number** | **1R120602-1104** |

| AEI Magnet | Quantity: Each |
|---|---|
| | Systems: ISQ 7000; TSQ 9000 with AEI source |
| **Thermo Scientific Part Number** | **1R76253-2000** |

| AEI Source Magnet Assembly | Quantity: Each |
|---|---|
| | Systems: ISQ 7000; TSQ 9000 with AEI source |
| **Thermo Scientific Part Number** | **1R120602-0200** |

| NeverVent AEI Ion Source Cartridge | Quantity: Each |
|---|---|
| 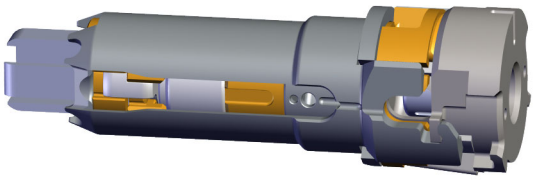 | Systems: TSQ 9610 with NVAEI |
| **Thermo Scientific Part Number** | **1R120189-6030** |

| NeverVent AEI Ion Volume | Quantity: Each |
|---|---|
| 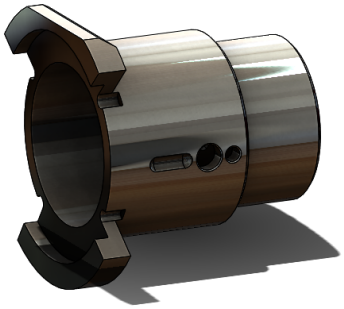 | Systems: TSQ 9610 with NVAEI |
| **Thermo Scientific Part Number** | **1R120189-2001** |

| NeverVent AEI Filament | Quantity: Each |
|---|---|
| 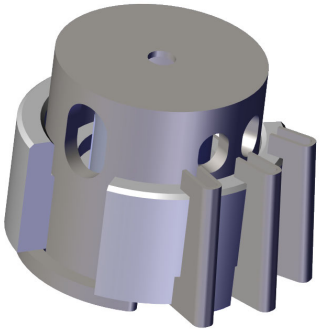 | Systems: TSQ 9610 with NVAEI |
| **Thermo Scientific Part Number** | **1R120189-6000** |

| NeverVent AEI Ion Cartridge Sleeve | Quantity: Each |
|---|---|
| 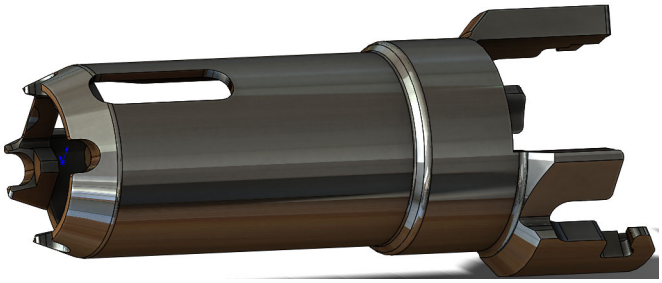 | Systems: TSQ 9610 with NVAEI |
| **Thermo Scientific Part Number** | **1R120189-2000** |

| NeverVent AEI Filament Insulator | Quantity: Each |
|---|---|
| 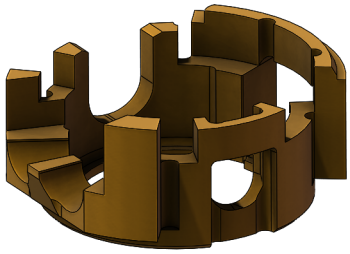 | Systems: TSQ 9610 with NVAEI |
| **Thermo Scientific Part Number** | **1R120189-2036** |

| NeverVent AEI Filament Cap | Quantity: Each |
|---|---|
| 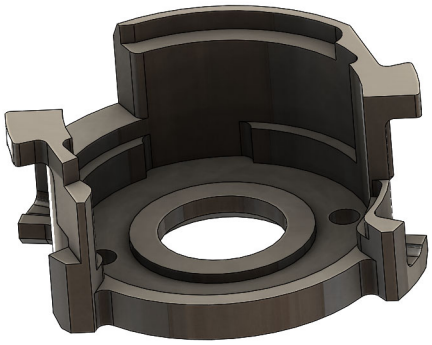 | Systems: TSQ 9610 with NVAEI |
| **Thermo Scientific Part Number** | **1R120189-2035** |

| NeverVent AEI Filament Spring | Quantity: Each |
|---|---|
| | Systems: TSQ 9610 with NVAEI |
| **Thermo Scientific Part Number** | **1R120189-3002** |

| Ion Gauge Option | Quantity: Each |
|---|---|
| | System: All |

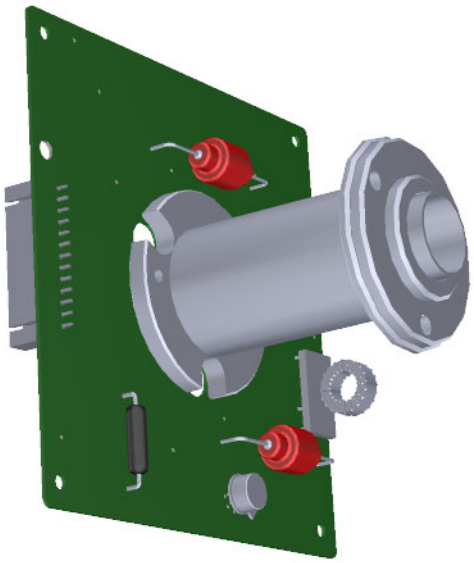

| Thermo Scientific Part Number | 1R120560-0020 |
|---|---|

NOTE: To replace the o-ring on the ion gauge, order PN 1R3814-116. To replace the ion gauge tube, order PN A0105-06003.

| Ion Gauge Controller PCB | Quantity: Each |
|---|---|
| | System: All |

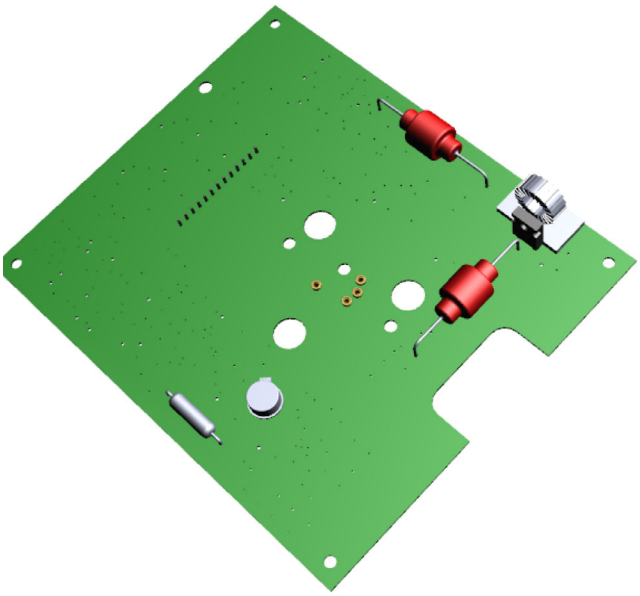

| Thermo Scientific Part Number | 1R120485-0120 |
|---|---|

| Ion Gauge Tube Shield | Quantity: Each |
|---|---|
| | System: All |
| **Thermo Scientific Part Number** | **1R119605-0012** |

| Large Turbomolecular Pump (nEXT 300D) | Quantity: Each |
|---|---|
| | System: All |
| **Thermo Scientific Part Number** | **1R119268-0002** |

| Ion Gauge Mount | Quantity: Each |
|---|---|

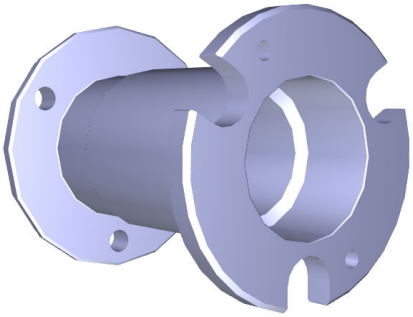

| Thermo Scientific Part Number | 1R120416-0002 |
|---|---|

| Dust Filters | Quantity: Each |
|---|---|
| | System: All |

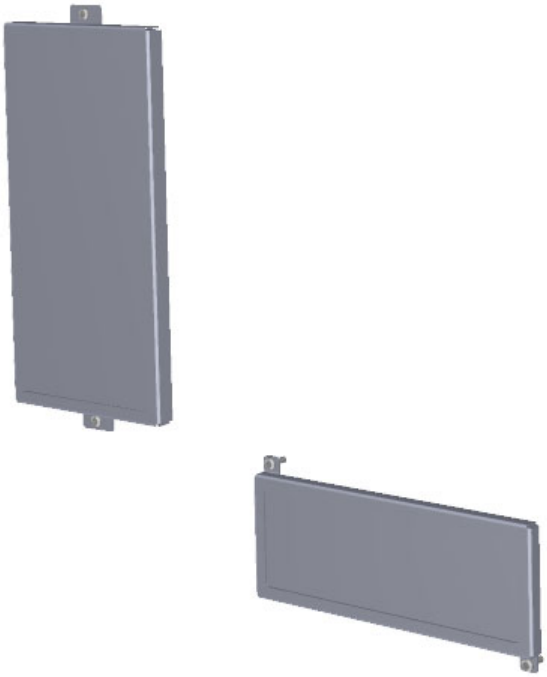

| Thermo Scientific Part Number | 1R120442-1000 |
|---|---|

| Direct Insert Probe | Quantity: Each |
|---|---|
| | System: Any GC-MS with VPI |
| **Thermo Scientific Part Number** | **1R120406-4000** |

| Direct Exposure Probe | Quantity: Each |
|---|---|
| | System: Any GC-MS with VPI |
| **Thermo Scientific Part Number** | **1R120406-5000** |

**Note** For information about ordering parts for the probes, see the *Direct Probe System User Guide*.